Roll-Around Tool Cart • Storage Pedestal • Lap Desk • Decorative Splined MIters

Woodsmith®

Vol. 20 / No. 118

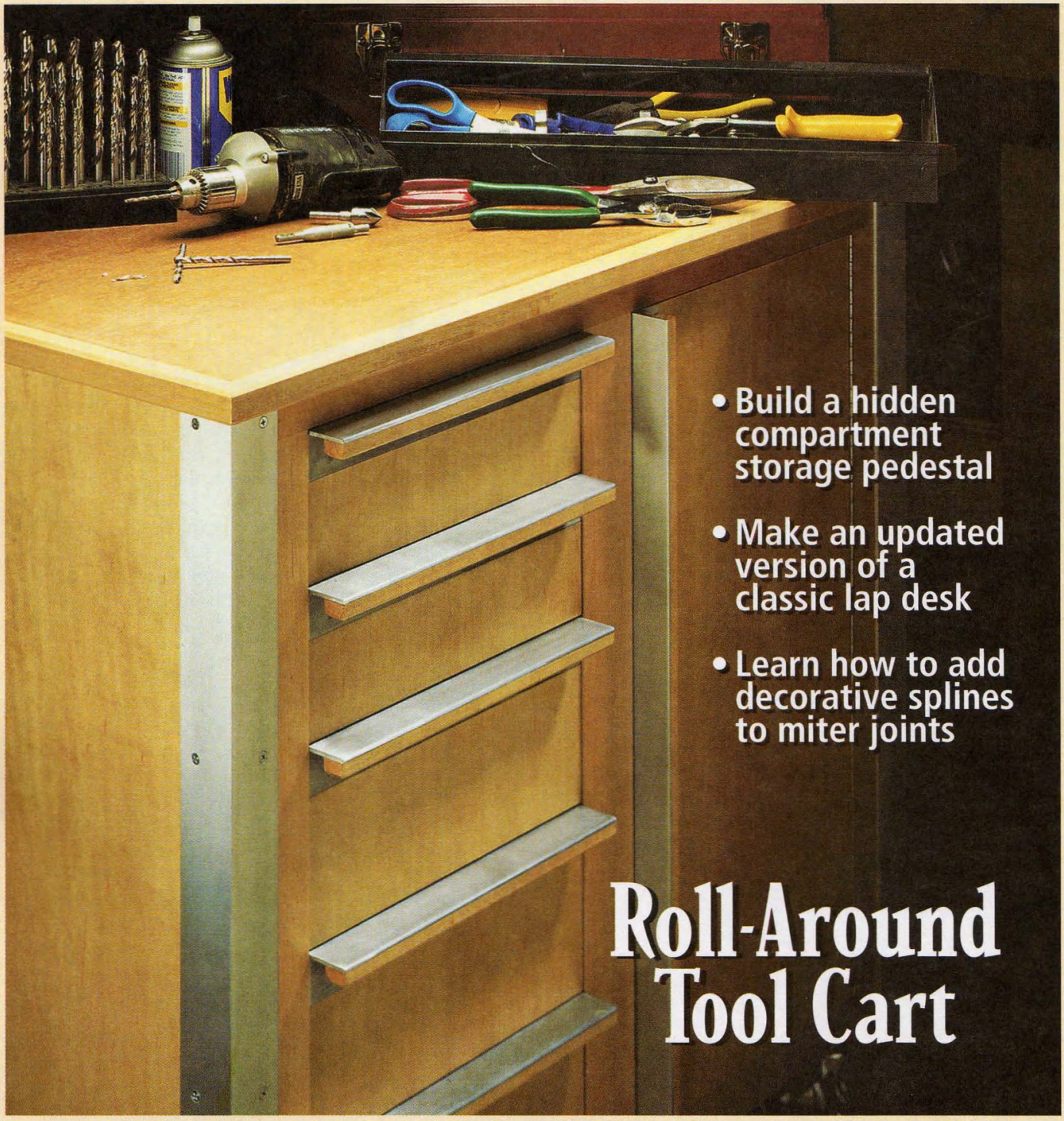

- Build a hidden compartment storage pedestal
- Make an updated version of a classic lap desk
- Learn how to add decorative splines to miter joints

Roll-Around Tool Cart

Woodsmith

No. 118 August, 1998

Publisher Donald B. Peschke
Editor Terry J. Strohman
Associate Editors Jon Garbison, Vincent Ancona
Contributing Editor Joseph E. Irwin
Art Director Todd Lambirth
Senior Illustrators David Kreyling, Dirk Ver Steeg, Mike Mittermeier

CREATIVE RESOURCES

Creative Director: Ted Kralicek • *Project Developer:* Ken Munkel • *Sr. Project Designer:* Kent Welsh • *Project Designer:* Kevin C. Boyle • *Shop Manager:* Steve Curtis • *Shop Craftsman:* Steve Johnson • *Senior Photographer:* Crayola England

BOOKS

Executive Editor: Douglas L. Hicks • *Senior Graphic Designer:* Chris Glowacki

CIRCULATION

Subscriber Services Director: Sandy Baum • *New Business Director:* Glenda K. Battles • *New Business Manager:* Todd Bierle • *Promotion Manager:* Rick Junkins• *Renewal Manager:* Paige Rogers • *Billing Mgr.:* Rebecca Cunningham • *Assistant Subscription Mgr.:* Joy Krause • *Associate Graphic Design Director:* Susie Rider • *Sr. Graphic Designer:* Cheryl L. Simpson

CORPORATE SERVICES

Vice President of Planning and Finance: Jon Macarthy • *Controller:* Robin Hutchinson • *Sr. Account.:* Laura Thomas • *Accts. Payable:* Mary J. Schultz • *Accts. Receivable:* Margo Petrus • *Production Dir.:* George Chmielarz • *Production Assistant:* Susan Rueve • *Electronic Pub:* Douglas M. Lidster • *Pre-press Image Specs.:* Troy A. Clark, Minniette Bieghler • *New Media Manager:* Gordon C. Gaippe • *Web Site Art Director:* Gene Pedersen • *Network Administator:* Chris Harrison • *H.R. Assistant:* Kirsten Koele • *Admin. Assistant:* Julia Fish • *Receptionists:* Jeanne Johnson, Sheryl Ribbey • *Special Projects Director:* Saville H. Inman • *Building Maint.:* Ken Griffith

WOODSMITH MAIL ORDER

Operations Director: Bob Baker • *Materials Mgr:* Mark Mattiussi • *Customer Service Mgr.:* Jennie Enos • *Warehouse Supr.:* Nancy Johnson • *Buyer:* Linda Jones • *Technical Service Rep.:* Matt TeRonde • *Oper. Assist.:* Tammy Aldini • *Cust. Serv. Reps.:* Anna Cox, Tammy Truckenbrod, Nancy Downey, Adam Best, Deborah Rich • *Warehouse:* Sylvia Carey • *Quality Control Tech.:* Frank Johnson

WOODSMITH STORE

Manager: Dave Larson • *Assistant Manager:* Paul Schneider • *Sales Staff:* Pat Lowry, Jerome Herr, Wendell Stone, Jim Barnett, Kathy Smith, John Johnson • *Office Manager:* Vicki Edwards

Woodsmith® (ISSN 0164-4114) is published bimonthly (Feb., Apr., June, Aug., Oct., Dec.) by August Home Publishing Company, 2200 Grand, Des Moines, IA 50312.

Woodsmith® is a registered trademark of August Home Publishing. **Copyright©** 1998 August Home Publishing Company. All rights reserved.

Subscriptions: Single copy: $4.99. One year subscription (6 issues), $24.95. (Canada/Foreign add $6 per year, U.S. funds.)
Periodicals Postage Paid at Des Moines, IA and at additional offices. USPS/Heartland Press Automatable Poly.
Postmaster: Send change of address to *Woodsmith*, Box 37112, Boone, IA 50037-2112.
Subscription Questions? Write to *Woodsmith*, P.O. Box 842, Des Moines IA 50304-9961 or call 1-800-333-5075, 8:00 am to 5:00 pm, Central Time, weekdays. Or fill out the Subscription Services form on our web site: http://www.woodsmith.com
E-Mail: woodsmith@woodsmith.com
World Wide Web: http://www.woodsmith.com

Printed in U.S.A.

EDITOR'S COLUMN

SAWDUST

One of the first things we do when designing a project is to pick the materials we're going to use. Typically we try to use common materials that people are familiar with. But things don't always go exactly as planned.

We were getting ready to start building the Roll-around Tool Cart featured on page 6. And Steve Johnson (our Shop Craftsman) had gone to the lumberyard to pick up materials. When he came back, I could tell by the look on his face that things hadn't gone well.

It seems the lumberyard was out of maple plywood, and it would be weeks before they received another shipment. So Steve brought back a new product for us to look at — MDF-core plywood.

MDF-CORE PLYWOOD. Now we've used MDF (Medium-Density Fiberboard) in the past. It's a manufactured product similar to hardboard, but it comes in thicker sheets (½" and ¾"-thick sheets are commonly available). And we often use it to make jigs and fixtures.

Even so, I was skeptical (some might say stubborn) about using "plywood" with an MDF core to build the tool cabinet. For one thing, it looked different from what I was used to. It didn't have any plies. Just a solid dark brown core with a layer of veneer on the top and bottom. But the more we talked about it, I began to realize there were several benefits to using MDF-core plywood.

BENEFITS. First, it's less expensive than traditional plywood. A 4x8 sheet of maple is about 45 dollars. (That's thirty-five percent *less* than a sheet of veneer plywood here in Des Moines.)

In addition, the sheets are very flat and tend to stay that way. So you don't have to worry about a large piece twisting or bowing. Plus, since the core is solid, you don't have to worry about dealing with the voids that traditional plywood often has.

Even though MDF-core sounds like the perfect material to replace plywood, it does have a couple of drawbacks.

HEAVYWEIGHT. First of all, it's very heavy. A ¾"-thick, 4x8 sheet of MDF-core plywood weighs over a hundred pounds. So lifting it out of a truck can be quite a chore. And you definitely want to have some help if you're cutting a full-size sheet on the table saw.

THIN VENEER. Another thing we noticed is the veneer on MDF-core seems very thin. So if you get carried away when sanding, you could easily sand through the veneer to the core.

So while it may not be suitable for every project, MDF-core will definitely have a place in our shop. But don't worry if you can't find it in your area. Traditional veneer core plywood will work just as well.

INDEX

We now have an updated index for *Woodsmith* and *ShopNotes* magazines. (*ShopNotes* is our companion publication.) This new index provides a complete reference to all the woodworking projects and techniques that have appeared in both *Woodsmith* and *ShopNotes*. If you'd like to purchase a copy of the new index, just give us a call at 1-800-444-7002.

Terry

A LOOK INSIDE

CONTENTS

Features

Roll-Around Tool Cart 6

MDF-core plywood and a solid wood frame make this tool cart rigid and sturdy. And metal corners help protect it from dents and dings as you roll it around your shop or garage.

Storage Pedestal 16

Dentil molding, a fluted column, and a marble top give this pedestal a classic look. And the hidden storage compartment inside makes this a practical and useful project as well.

Lap Desk 24

If you've got a budding Rembrandt or Picasso in your home, here's a project you'll want to build. The inside of this desk holds a continuous roll of paper, so there's always a fresh "canvas." And a built-in handle makes it easy to carry the desk anywhere.

Decorative Splined Miters 30

Don't let the name deceive you. Although splines are a great way to dress up a project, they also work well when it comes to strengthening a miter joint. And a splined miter joint is easy to make. All it takes is simple jig and our step-by-step instructions.

Sharpening Jig 32

A micro-adjusting feature and a gauge for setting up the bevel angle make this sharpening jig unique. But surprisingly, it's made almost entirely out of common hardware items you can find at most home centers.

Departments

Tips & Techniques 4
Shop Notes 14
Talking Shop 34
Sources 35

Roll-Around Tool Cart *page 6*

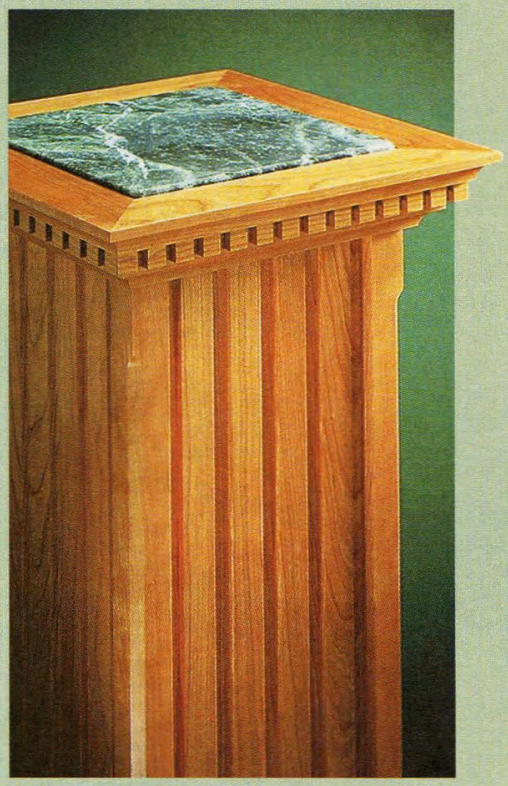

Storage Pedestal *page 16*

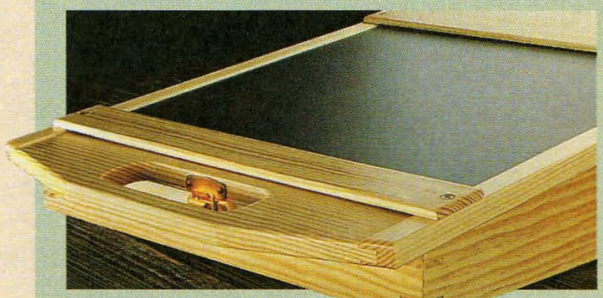

Lap Desk *page 24*

TIPS & TECHNIQUES

Fluted Columns

Recently I was building a project that called for some fluted rods, or columns. But since I don't own a lathe, I had to come up with another way to make the fluted dowels.

My solution was to use a table saw and a router table. I started by cutting several square blanks. (It's important to make the blanks as square as possible.) Then I tilted my saw blade 45° and bevel-ripped all four corners of each blank to create octagonal workpieces, see detail 'a.'

To make the flutes, I simply used a ¾" core box bit and a router table, see detail 'b.' The trick here is to prevent the blank from rotating while you feed it past the router bit. To do this, I made a simple jig that clamps to the router table and corrals the blank.

The jig is just a couple of hardwood fences screwed to a ¼"-thick hardboard base, see drawing below. A hole is drilled in the center of the base to allow clearance for the router bit, and a couple pieces of hardboard are screwed to the top of the jig to act as hold-downs as the blank is fed through the jig.

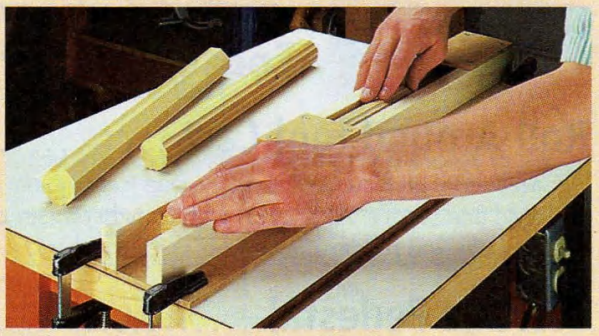

I positioned the jig on the router table by making test cuts on one of the blanks. Just shift the jig backward or forward until the flute is centered on a "corner" of the blank, see detail 'b.'

With the jig clamped in place, I simply fed the blank through, rotating it an eighth of a turn between passes.

Jim Shaver
Yukon, Oklahoma

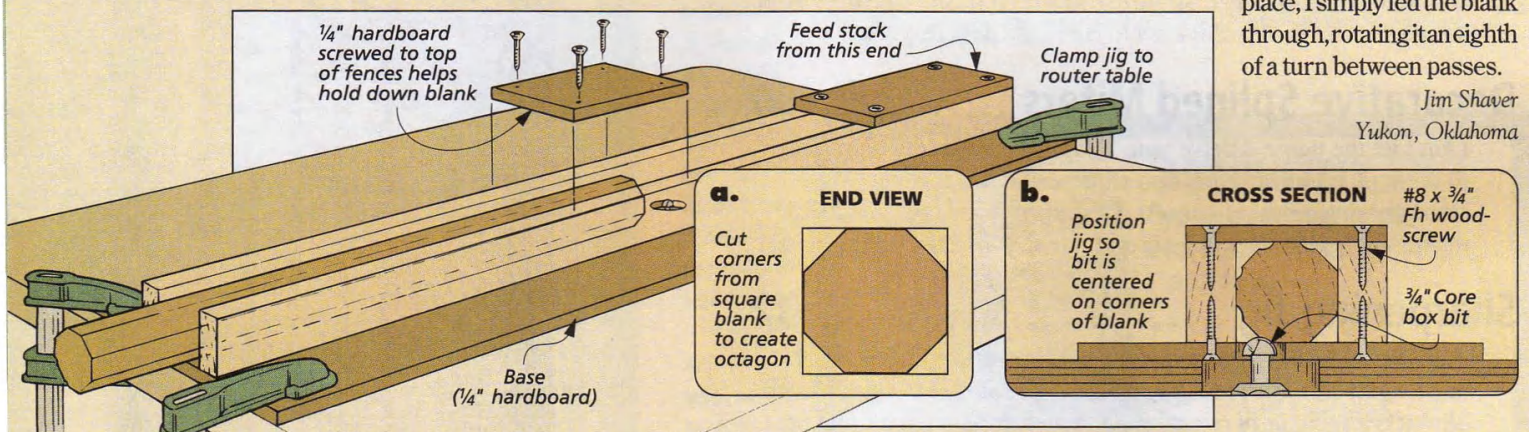

Drying Rack for Shelves

I read Daniel Egan's tip for finishing shelves in the last issue of *Woodsmith* and thought I would share my method. In order to finish both sides of a shelf at one time, I hang the shelves vertically on a simple rack.

To make the rack, I start by drilling a series of ½"-dia. holes about four inches apart down the center of a scrap board. (I used a piece of 2x4 stock.) Then rip the board in two, cutting right through the holes.

By tacking a couple of cross rails at the top and bottom, you end up with a rack for holding the shelves, see drawing. Shop Note: The length of the cross rails is determined by the width of the shelves.

Now just partially drive a small nail or screw into the sides of each shelf near the back. With the rack leaning against a wall, the shelves can be hung vertically while the finish dries, see detail 'a.'

R. B. Himes
Vienna, Ohio

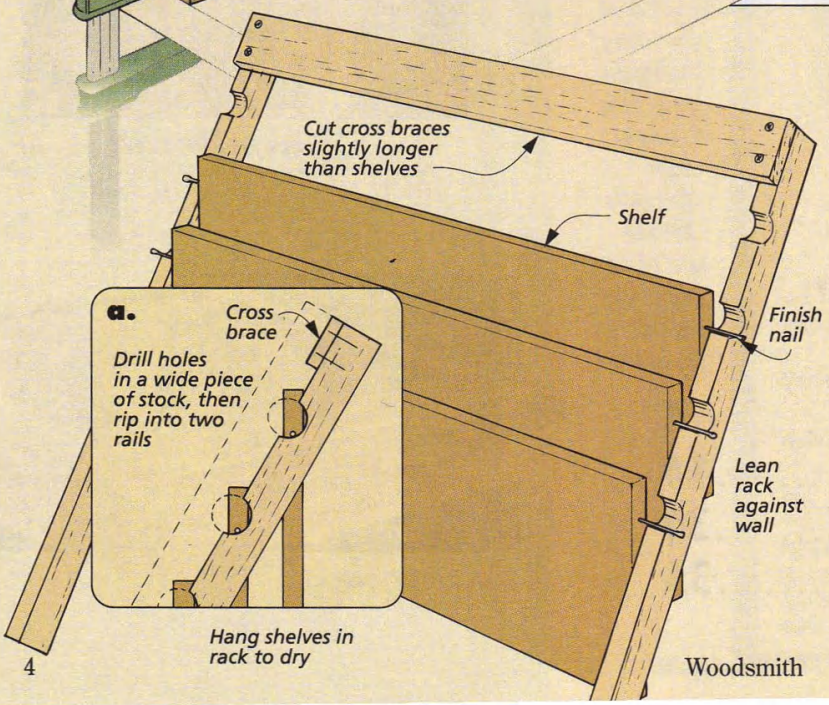

Drill Press Fence

In the past, I used to just clamp a board to my drill press table whenever I needed a fence. But trying to position the fence was awkward. So I came up with a simple fence design that is easier to use and incorporates a stop block.

One end of the fence is attached to a plywood base with a carriage bolt and a threaded knob. This allows you to swing the fence in or out. The "free" end of the fence is then secured to the base with a small clamp, see drawing.

The fence is made out of two pieces of 1½"-thick stock. But before gluing them together, I cut a groove and a rabbet along one edge of each piece, see detail 'a'. This creates a slot for the stop block when the two halves of the fence are glued together.

The base is just a piece of ¾"-thick plywood that is mounted to the drill press table with carriage bolts, see detail 'b'.

The stop block is also made from 1½"-thick stock, see drawing. Rabbets cut along the top and bottom edge of the block create a tongue that rides in the slot on the fence. Then a hole is drilled through the block to allow for a toilet bolt, washer, and wing nut.

Stuart Carter
Rocky Point, North Carolina

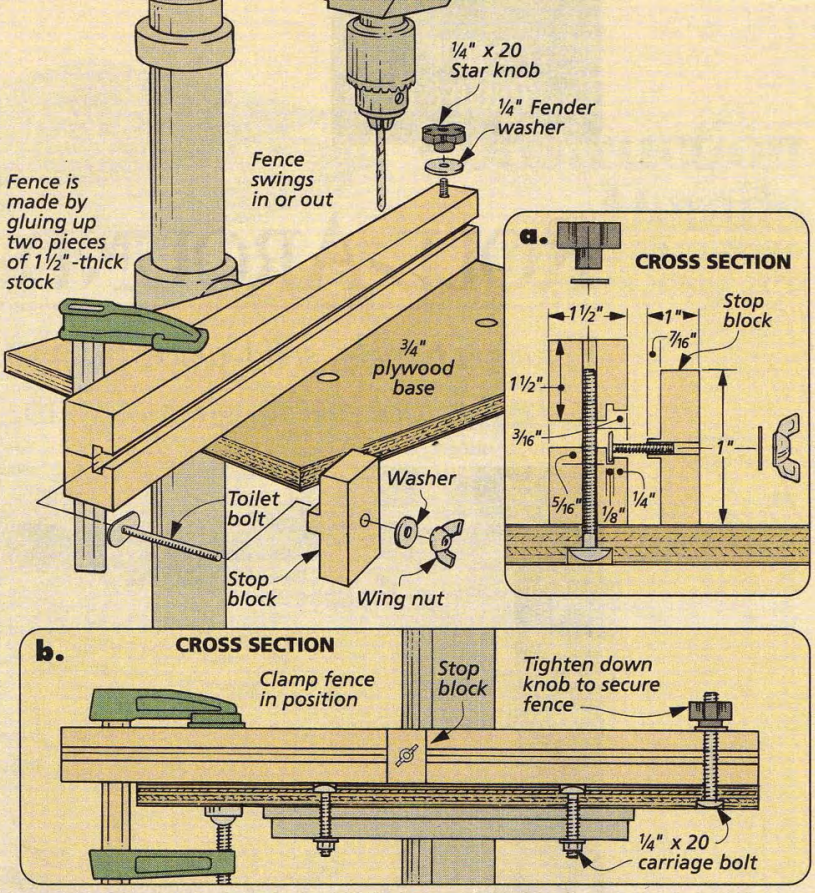

QUICK TIPS

DUST COLLECTOR

I used to have trouble with small scraps lodging in the hose of my dust collector.

To prevent this, I fastened a piece of ¼" hardware cloth under my table saw, right over the dust collector port. The hardware cloth screens out the scraps.

David Moore
Rogersville, Missouri

CHAMOIS CLOTH

I use a lot of wipe-on finishes in my shop. But I find that paper or cloth rags tend to shed lint.

So instead, I use a small piece of leather cut from an old chamois (the kind used to dry off your car). Afterwards, I wash the chamois out in thinner.

Greg Ortiz
Gardiner, New York

Clothespin Clamp

Recently I was building a cabinet that had drawers with wood knobs. I wanted to stain the knobs a different color from the rest of the cabinet, so I had to finish them separately from the drawers.

To do this, I simply threaded each knob onto its screw. Then I clamped a clothespin onto the screw to hold the knob upright while applying the finish.

Paul Muller
Newton, Iowa

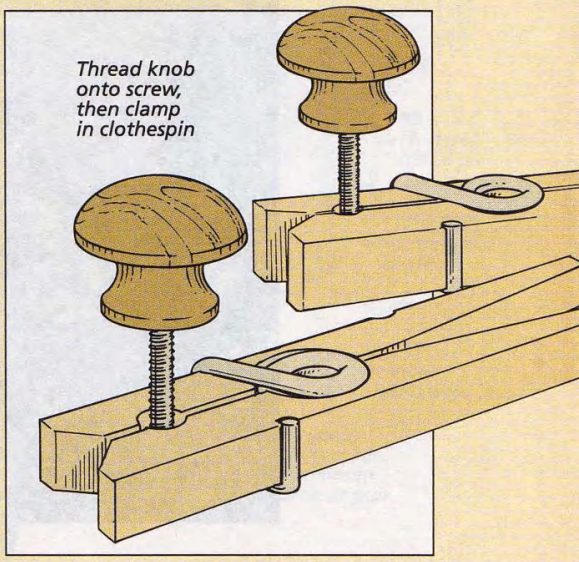

SUBMIT YOUR TIPS

If you would like to share an *original* shop-tested tip, send it to: *Woodsmith,* Tips and Techniques, 2200 Grand Avenue, Des Moines, Iowa 50312. Or if it's easier, FAX it to us at: 515-282-6741. Or use our E-Mail address: woodsmith@woodsmith.com.

Include a brief explanation and sketch or photo. If your tip is published, you'll receive $30 to $150, depending on the published length. And don't worry, we'll rewrite the tip and redraw the art, if necessary. Also, *please* include a daytime phone number so we can contact you if we have any questions regarding your tip.

Pocket Magnet

Recently I was helping my dad do some work on our barn. But instead of trying to climb a ladder one-handed while holding onto a fistful of screws, I slipped a strong magnet into my front pants pocket.

The magnet holds the screws to the outside of my pants pocket, leaving both my hands free.

Nate Perry (12 years old)
Chatfield, Minnesota

ROLL-AROUND TOOL CART

Plywood panels, solid-wood frame members, and heavy-duty hardware make this tool cart tough enough to stand up to just about anything.

My next-door neighbor probably spends as much time in his garage working on automobiles as I spend in my shop. (It's a convenient arrangement — he fixes my car, and I build him a piece of furniture.)

While I was visiting with him the other day, I noticed the mechanic's tool chest that he normally keeps in the corner of the garage was rolled up right next to the automobile he was working on. This got me to thinking how nice it would be to have a chest or cart that could be rolled around the shop just where you need it. And that's where I got the inspiration for this tool cart.

FEATURES. The design I came up with incorporates a lot of the same features that are included on commercially-made chests — full-length drawer pulls, heavy-duty casters, and full-extension, ball-bearing drawer slides, see photo. But I also added a few modifications to make the cart more of a "woodworker's" tool chest.

For one, I used wood instead of steel for the structural elements of the cart. But to give the cart the look of metal, I reinforced the corners with aluminum angle. Then to make the drawers a little more useful, I made them deeper to accommodate different kinds of tools. Finally, I added a cabinet on one side of the cart.

PLYWOOD. There's one other feature of this chest worth mentioning. Most of the panels I used for the sides, bottom and top are made of plywood. But instead of ordinary veneer-core plywood, I used a different type of material on this project. It's a plywood made with an MDF (medium-density fiberboard) core. For more on this type of plywood, see the box at the bottom of page 9.

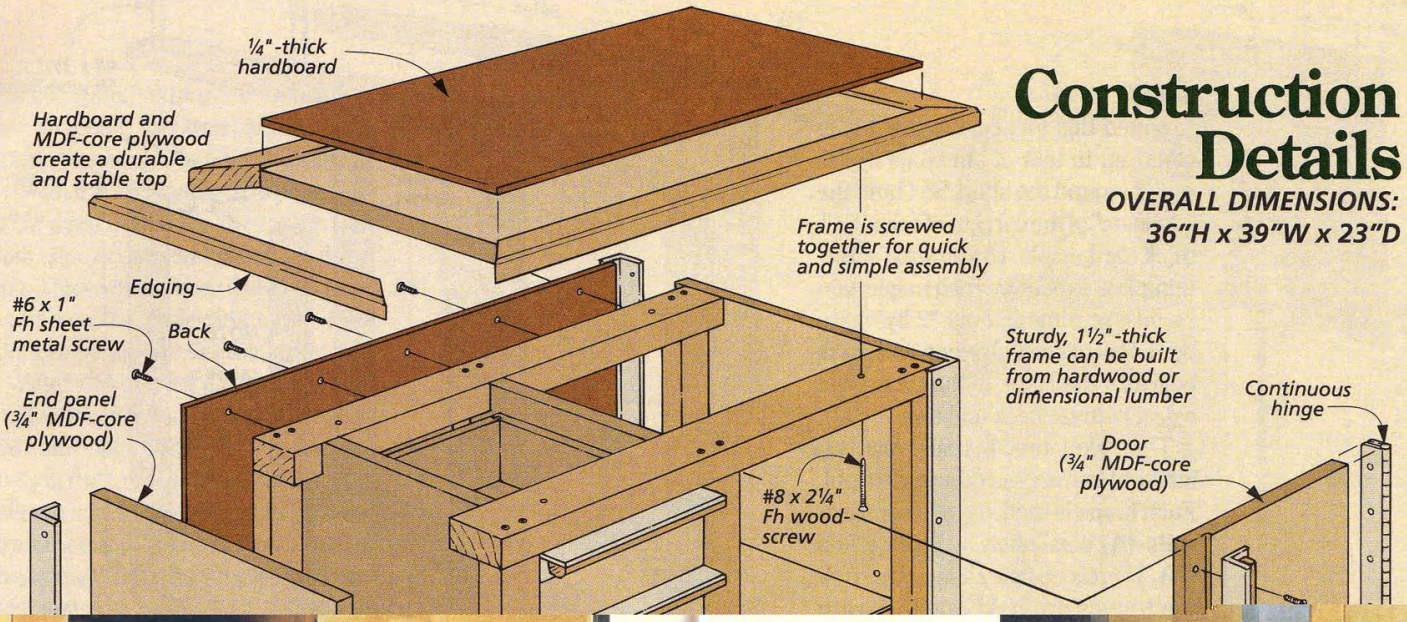

Construction Details

OVERALL DIMENSIONS: 36"H x 39"W x 23"D

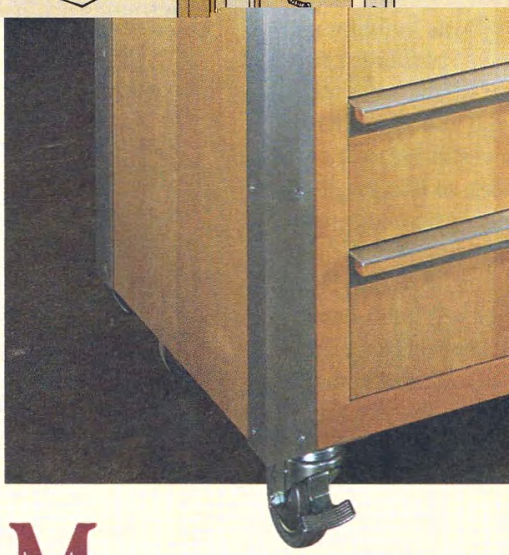

s much
les as I
t — he
)
noticed
s in the
e auto-
ng how
e rolled
s where

es a lot
ercially-
ty cast-
es, see

photo. But I also added a few modifications to make the cart more of a "woodworker's" tool chest.

For one, I used wood instead of steel for the structural elements of the cart. But to give the cart the look of metal, I reinforced the corners with aluminum angle. Then to make the drawers a little more useful, I made them deeper to accommodate different kinds of tools. Finally, I added a cabinet on one side of the cart.

PLYWOOD. There's one other feature of this chest worth mentioning. Most of the panels I used for the sides, bottom and top are made of plywood. But instead of ordinary veneer-core plywood, I used a different type of material on this project. It's a plywood made with an MDF (medium-density fiberboard) core. For more on this type of plywood, see the box at the bottom of page 9.

My next-door neighbor probably spends a
time in his garage working on automob
spend in my shop. (It's a convenient arrangeme
fixes my car, and I build him a piece of furniture

While I was visiting with him the other day, I
the mechanic's tool chest that he normally keep
corner of the garage was rolled up right next to t
mobile he was working on. This got me to think
nice it would be to have a chest or cart that could b
around the shop just where you need it. And that'
I got the inspiration for this tool cart.

FEATURES. The design I came up with incorpora
of the same features that are included on comm
made chests — full-length drawer pulls, heavy-du
ers, and full-extension, ball-bearing drawer slid

Case

I wanted this tool cart to be able to stand up to lots of abuse as it was rolled around the shop. So I built the "skeleton" of the cart out of solid, 1½"-thick hard maple. (If you want something less expensive than maple, you could use dimensional "2-by" lumber.) Then I used plywood and hardboard for the "skin" of the cart — the sides, bottom, back and top.

This "skeleton" is really just two identical frames, see drawing at right. Each frame is made up of a couple of **rails (A)** connected by three **stiles (B)**. There's no fancy joinery here — the frames are held together with screws and butt joints. But before you can assemble the frames, there are a couple of details to tend to.

RABBETS. First, you'll need to cut a ¾"-deep rabbet along one edge of the lower rail of each frame, see detail 'c.' (I cut these with a dado blade.) These rabbets will hold a bottom piece that is added later.

Next, you'll need to cut a 1"-deep, ½"-wide rabbet on one edge of four of the stiles, see detail 'b.' These rabbets will hold a couple of panels that will be used for mounting the drawer hardware. (The other two stiles are left unrabbeted.)

With the rabbets cut, the frames are ready to be assembled. The easiest way to do this is to lay each frame out on top of a flat surface (I used my workbench), see photo below. Then clamp the pieces together so the screw hole locations can by laid out. And in order to keep the middle stile centered on the length of the rails, I made four spacer blocks to fit in between the stiles, see photo.

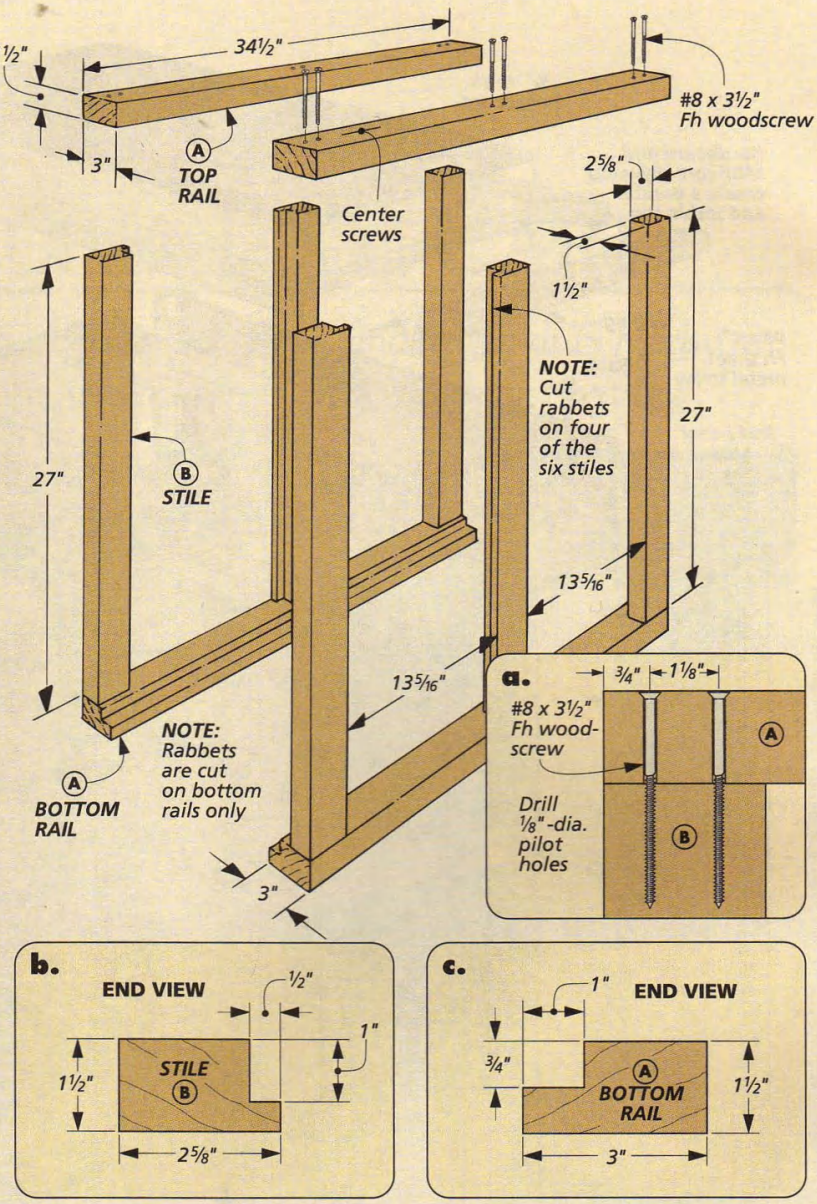

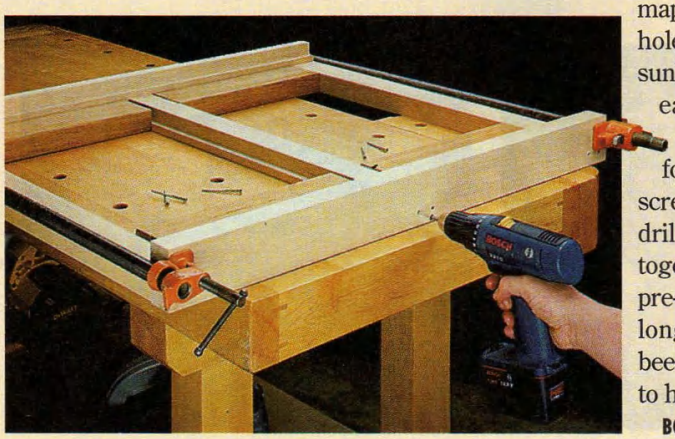

▲ *To help center the stile and keep it from moving, I added spacer blocks to either side. Then I drilled the shank and pilot holes and installed the woodscrews.*

SCREWS. The rails and stiles are held together by 3½"-long woodscrews. But to drive screws this long into hard maple, you'll need to drill some pilot holes. I started by drilling countersunk holes for the shank and head of each screw, see detail 'a' above. Then I drilled a ⅛"-dia. pilot hole for the threaded portion of each screw. Once all the screw holes are drilled, the pieces can be fastened together. Shop Note: Even with the pre-drilled holes, driving screws this long is tough. So I rubbed a little beeswax on the threads of each screw to help "grease the skids."

BOTTOM & ENDS. With the frames completed, you can begin working on the bottom and end panels that connect the frames, see drawing on opposite page. All three of these panels are made out of ¾"-thick MDF-core plywood, see box on next page. (You could also use regular veneer-core plywood.)

The **bottom panel (C)** is cut ½" longer than the frames so that it overhangs each frame by ¼" at both ends, see detail 'c' on opposite page. Later, a dado will be cut in the end panels to fit over the projecting ends of the bottom panel, locking the panels in place, see detail 'a' on opposite page. This makes the cart more rigid.

With the bottom cut to size, you can determine the size of the **end panels (D)**. To do this, stand the frames up and set the bottom panel in place between them. The length of the end panels should match the height of the frames. But the panels are cut ¼" *wider* than the overall width of the frames and bottom. (I made my pan-

els 20" wide.) When the end panels are attached, this overhang will create an "opening" for a 1/4"-thick back.

With the end panels cut to size, I cut a 1/4"-deep dado near the inside, bottom edge of each end panel, see drawing. The width of these dadoes is sized to fit over the projecting ends of the bottom panel, see details 'a' and 'c.'

After the dadoes are cut, the panels can be attached to the frames. The bottom panel is glued into the rabbets in the frames. Then the end panels are screwed onto the ends of the frames, trapping the bottom panel in between. When attaching the end panels, just remember that the panels should be flush in front but overhang the *back* of the cart by 1/4".

BACK. The back of the cart is nothing more than a piece of 1/4"-thick hardboard, cut to fit in between the two end panels, see drawing and detail 'd.' This **back panel (E)** is simply screwed in place.

ALUMINUM CORNERS. To strengthen the cart and prevent the corners from getting damaged, I added a piece of aluminum angle to each corner. I used 1/8"-thick, 2" x 2" aluminum angle for my corners. (You should be able to buy this at your hardware store, or see page 35 for sources.)

Since aluminum angle is typically sold in eight-foot or longer lengths, you'll have to cut the aluminum down to the size you need. This can be done with a hacksaw. Then any rough ends can be smoothed with a file.

In addition to cutting the aluminum to length, you'll also need to do a little clean up work. The aluminum we bought still had grease and dirt on it from the factory, not to mention a number of scuffs and scratches. (For more on working with aluminum, see page 14.)

DRILL HOLES. The aluminum is mounted to each corner with flathead woodscrews. I drilled some countersunk holes in the aluminum for these screws.

Once all the holes are drilled, the aluminum can be mounted to the cart, see detail 'b.' Now you're ready to move on to making the drawers.

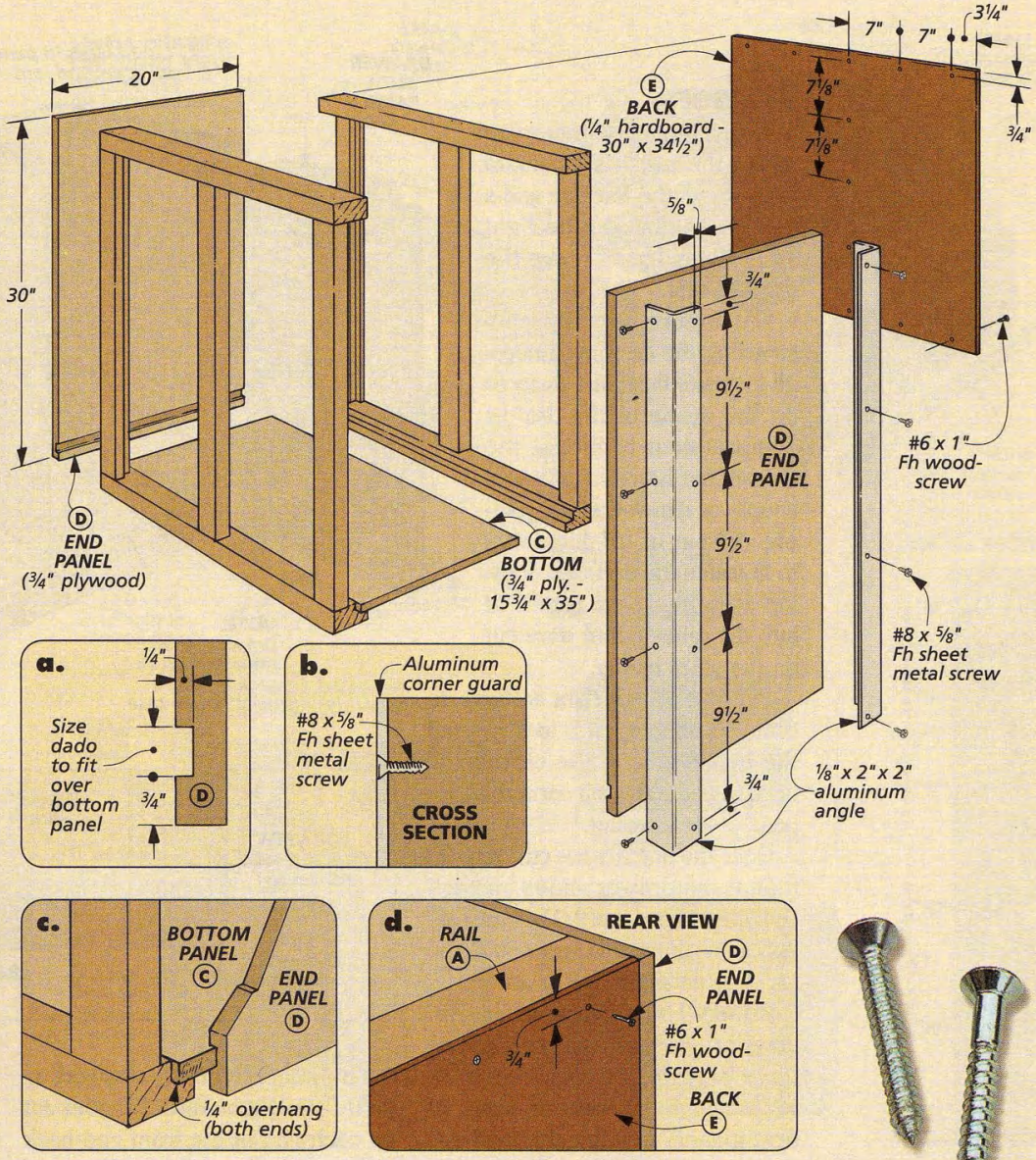

▲ *Sheet metal screws (left) hold better in MDF-core plywood than woodscrews.*

MDF-CORE PLYWOOD

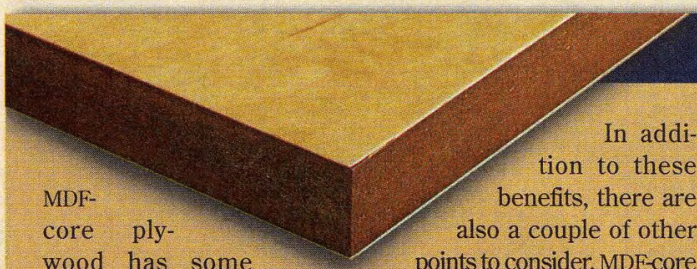

MDF-core plywood has some distinct advantages over traditional, veneer-core plywood. For one thing, it's less expensive (about 35% less). It's also more stable, which means it won't be as apt to warp or twist.

In addition to these benefits, there are also a couple of other points to consider. MDF-core plywood tends to be a bit heavier than conventional plywood. (This can be a blessing or a curse, depending on the project.) And you also have to be careful when it comes to sanding MDF-core plywood.

VENEER. The veneer on the good (A) side of MDF-core plywood is so thin it doesn't take much to sand right through it. Now this isn't much different from traditional plywood. But the trouble is the core of MDF plywood is so much darker than the veneer that it shows through all the more. So I try to keep sanding to a minimum.

SCREWS. One more thing. Like all MDF products, MDF-core plywood doesn't hold woodscrews as well as solid wood or veneer plywood. So I like to use sheet metal (self-tapping) screws. These are threaded along their entire length to provide more "grabbing" power, see photo in margin.

Drawers

To provide plenty of storage space, the cart has a bank of drawers on the left side and a storage cabinet on the right side. I decided to make the drawers first.

But before actually constructing the drawers, I needed to create flush, flat surfaces on the inside of the drawer compartment to mount the drawer hardware. So I cut a couple of **drawer slide panels (F)** out of ½"-thick MDF to fit inside the cart, see drawing at right. These panels fit into the rabbets that were cut on the stiles earlier.

But there's one slight problem. In order for these panels to fit around the upper rails of the cart, you'll need to notch the top corners of the panels, see drawing.

Once the notches are cut, you can mount the drawer slides on each panel, see Figs. 1 and 2. Then the panels can be glued and screwed to the cart, see details 'a' and 'b' above.

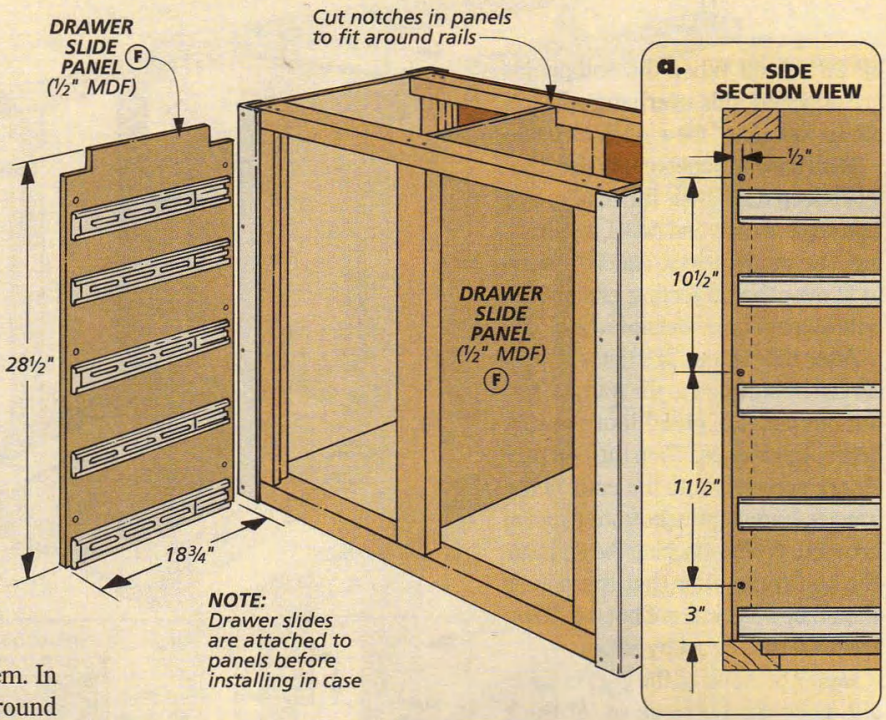

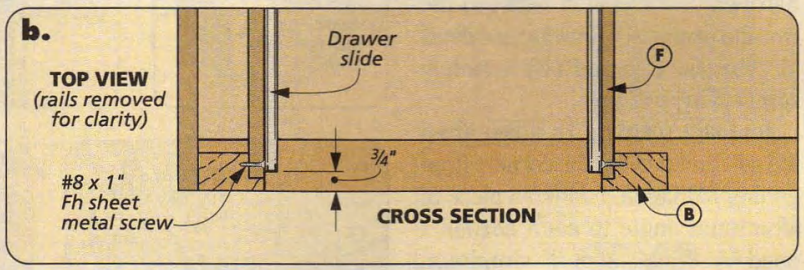

DRAWERS. The tool cart contains five drawers (two small, shallow ones and three large,deeper ones, see drawing in margin on opposite page). At first glance, making the drawers might look like a lot of work. But since the parts are identical (except for the height), a lot of this is really just a matter of repetition. I started by cutting all the **drawer fronts/backs (G, H)** and **sides (I, J)** to size from ½"-thick MDF, see drawing on next page.

The joinery for the drawers is pretty straightforward. Tongues cut on each end of the front and back pieces of the drawer fit into dadoes cut near the ends of the side pieces, see detail 'b' on opposite page. To make these joints, I dadoed the side pieces first and then cut the tongues on the front and back pieces to fit.

Before assembling the drawers, I cut a groove near the bottom of each drawer piece to hold a ¼"-thick hardboard bottom, see detail 'a' on opposite page. After cutting out the five **drawer bottoms (K)**, the drawers can be glued up and clamped.

Next I mounted the drawer slides to the sides of the drawers and placed the drawers inside the cabinet. This way I could position the false fronts on

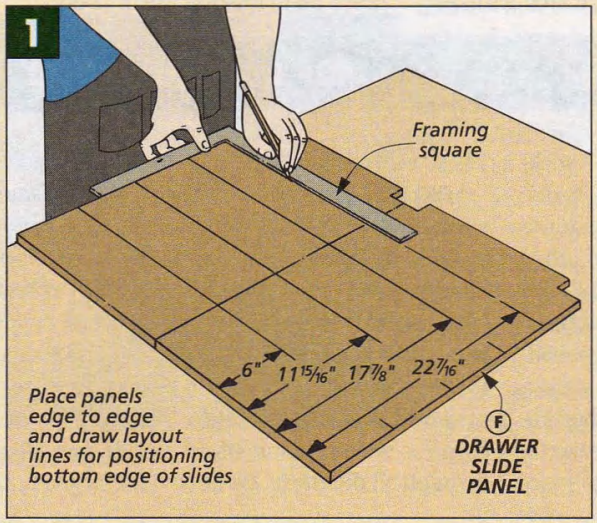

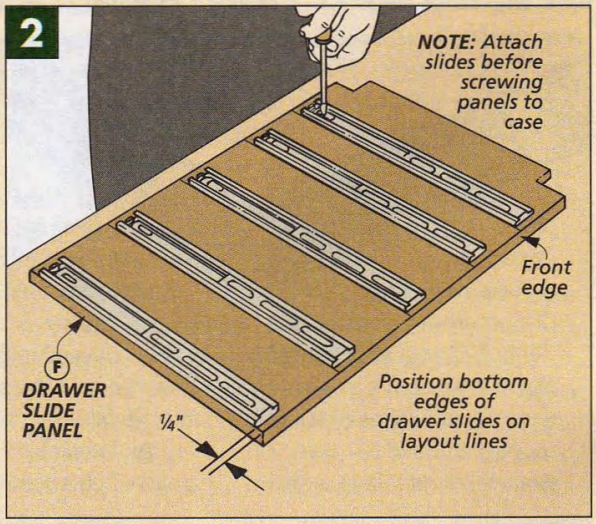

each drawer so that there is an even gap all around each drawer.

FALSE FRONTS. The **false fronts (L, M)** are made from ¾"-thick MDF-core plywood, see drawing in margin. Before attaching them to the drawers, I cut a shallow rabbet along the top edge of each false front, see detail 'c'. This rabbet creates a recess for the drawer pull that gets added next. (For more on cutting these wide rabbets, see page 15.)

Once the rabbets are cut, the false fronts can be screwed to the drawers, see detail 'a.' To do this, I worked from the bottom drawer up, clamping each false front to the drawer while attaching it. And I used some 1/16" spacers to create an even gap all the way around each drawer.

DRAWER PULLS. I could have used store-bought pulls for this cabinet, but I wanted something that would match the aluminum angle I used on the corners of the cart. So I made my own drawer pulls, this time out of 1½" x 1½" aluminum angle.

There's not much to making the pulls. They're simply five pieces of aluminum cut to length, see drawing. After cleaning and buffing the aluminum, a countersunk hole is drilled at each end for the mounting screws, see detail 'c.' Then the aluminum is screwed to the drawer false fronts.

DRAWER GRIPS. The aluminum angle by itself doesn't offer much of a grip for opening the drawers. So I created a lip by adding a wood strip, or finger grip, to the underside of the aluminum, see drawing. These **drawer grips (N)** are just narrow pieces of ¾"-thick stock, chamfered along the lower edges, see drawing. Then they are epoxied to the aluminum and clamped in place, see photo.

SLIDING TRAY. For storing small items that might get lost, I added a removable sliding tray to the top drawer.

This tray is nothing more than a front, back, and two sides made out of ½" MDF with a ¼"-hardboard bottom. The tray rides on two ¼" hardboard runners that are glued to the sides of the drawer, see box below.

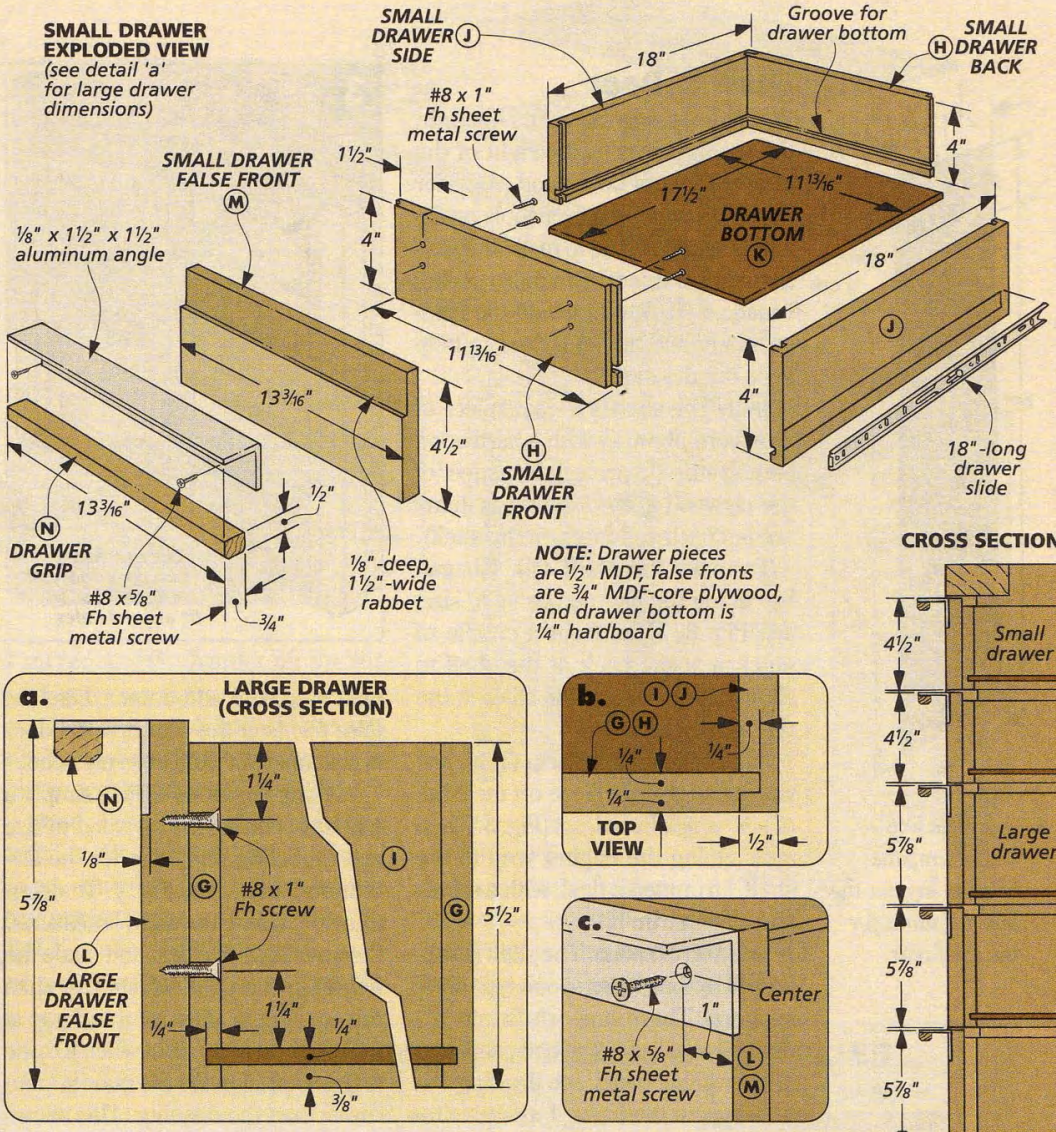

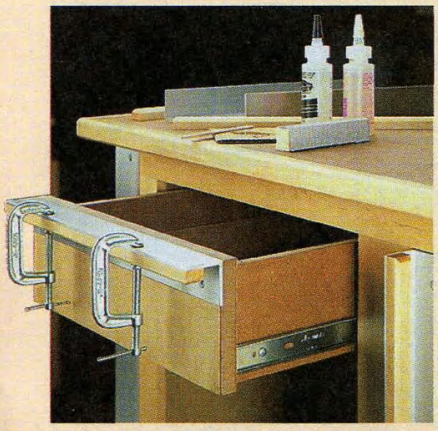

▲ *Once the pulls are screwed on, the drawer grips can be epoxied and clamped in place.*

OPTIONAL SLIDING TRAY

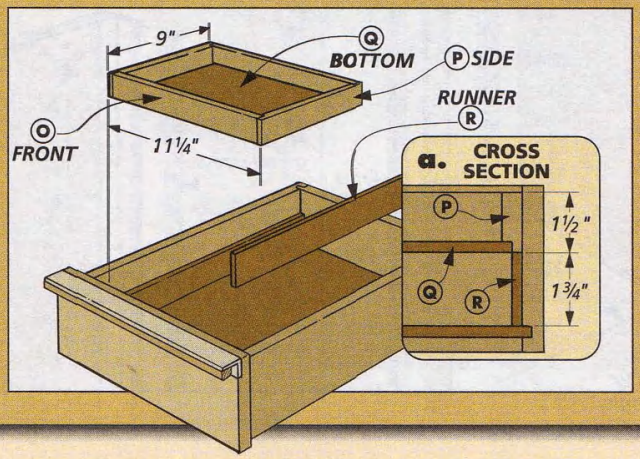

To make the sliding tray, I started by cutting the front, back and sides to size. Then rabbets are cut on the ends of the side pieces to hold the front and back. Next a rabbet is cut along the bottom edge of all four pieces to hold the tray bottom. After the tray is glued up, the runners can be added, see detail 'a'.

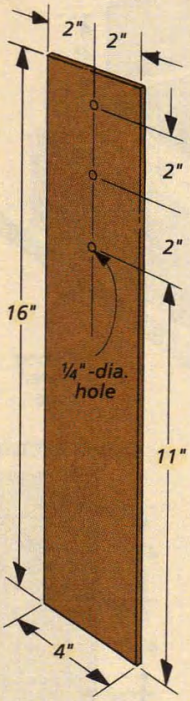

▲ *A simple hardboard template helps to lay out the hole locations for the shelf pins.*

Shelf & Door

When designing the cart, I thought the storage area to the right of the drawers would be a good place for keeping portable power tools or finishing supplies. And to make the storage compartment even more useful, I made a shelf to fit inside the compartment and added a door to help keep out the dust.

SHELF. The shelf is a single piece of MDF-core plywood with a hardwood edging strip (to protect the veneer of the plywood from chipping as items are put back and forth on the shelf).

To make the **shelf (S)**, I began by cutting the plywood panel to size, see Fig. 3. Then I cut a couple of notches at the back of the shelf to allow it to fit around the stiles at the rear of the cart.

I made the **edging strip (T)** by just ripping a ¼"-wide piece off the edge of a ¾"-thick board, see Fig. 3. Then after gluing the edging strip to the shelf, I trimmed it flush with a router and a flush-trim bit.

SHELF SUPPORT HOLES. The shelf is supported by four brass spoon-type shelf supports. These supports fit into ¼"-dia. holes drilled in the end panel and drawer guide panel, see drawing. To help lay out the holes, I made a simple template, see drawing in margin.

DOOR. With the shelf completed, the next step is to add a door. Like the false fronts of the drawers, the door is also made of MDF-core plywood.

Making the **door (U)** is simply a matter of cutting the plywood to size and rabbeting one edge for the aluminum handle, see Fig. 4. To determine the size of the door, I measured the opening in the cart and made the height of the door ⅛" shorter than the opening to allow for a 1/16" gap at the top and bottom. But when it came to the width, I made the door ¼" narrower than the opening. This allows for a 1/16" gap on one side of the door, and an extra 3/16" for the hinge. (I made my door 13 1/16" x 26⅞".)

Once the door is cut to size, you can cut the rabbet and add the aluminum pull and **door grip (V)**. The procedure for this is the same as that used on the drawer pulls, see Fig. 4b.

The door is attached with a continuous (piano) hinge. This is simply mounted to the right-hand edge of the door and then screwed to the right side of the door opening, see Fig. 4a.

Finally, I added a couple of roller catches to the door, see Fig. 4c. These catches will hold the door closed when you're wheeling the cart around in your shop.

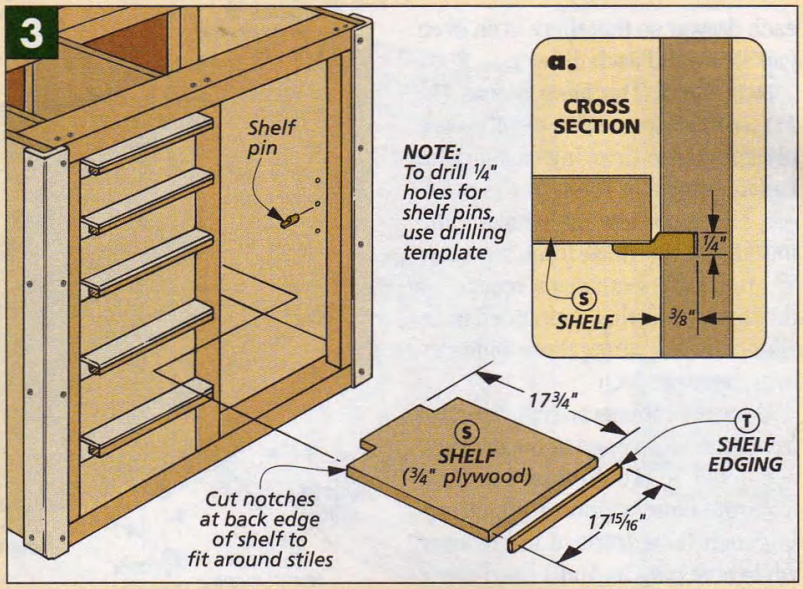

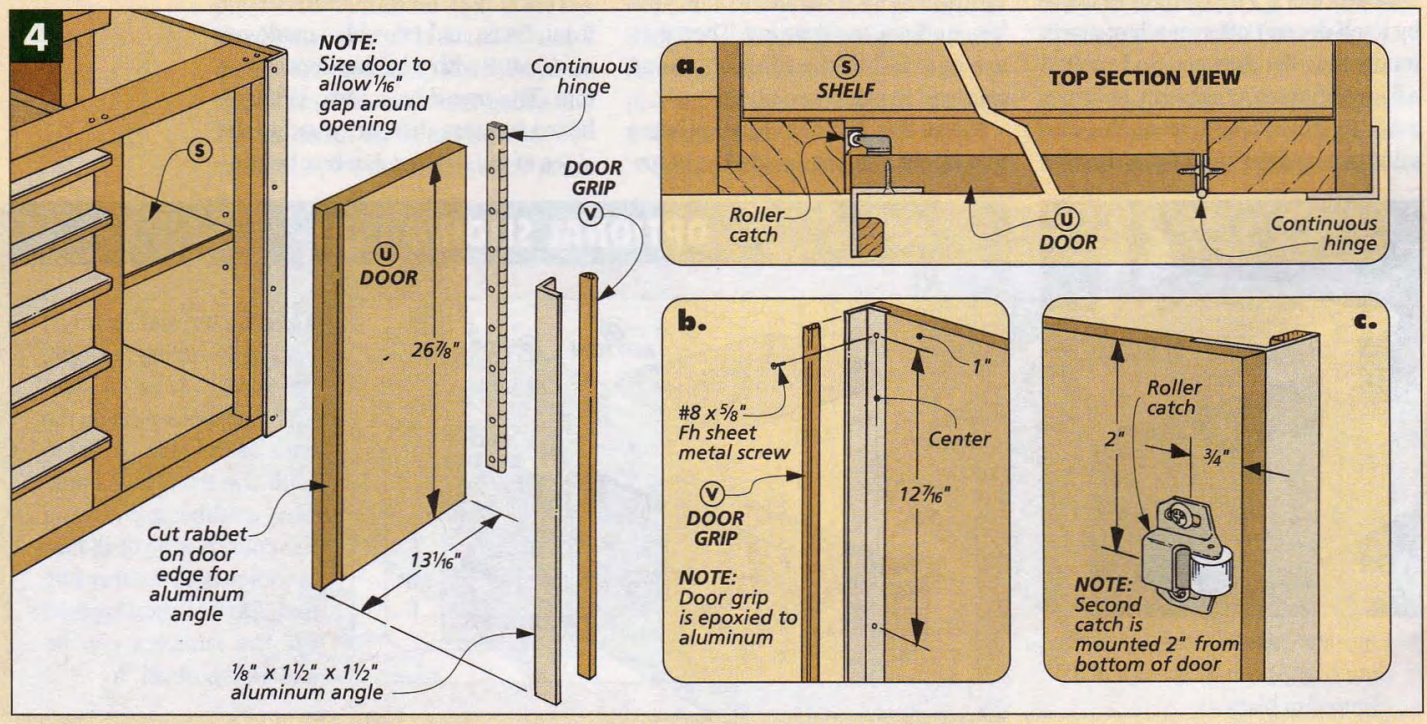

Top

All that's left to complete the cart is to make a top. Before doing this, however, I added four locking swivel casters to the bottom of the cart, see drawing at right and detail 'a.' (For more on these casters, see page 35.) The casters are simply screwed to the bottom rails of the cart.

With the casters attached to the cart, you can start on the top. I wanted the top to be thick enough and tough enough to be used as a work surface. So I made a "sandwich," using a layer of MDF plywood and a layer of 1/4" hardboard, see drawing.

To do this, I simply cut a **sub-top (W)** to size out of 3/4"-thick plywood. Then I glued the **top panel (X)** (an oversize piece of 1/4"-hardboard) to this sub-top, using contact adhesive. Finally, I used a router to trim the top panel flush with the sub-top.

To cover the edges of the top, I added some hardwood **edging strips (Y, Z)**, see drawing and detail 'b.' These are simply mitered to length and then glued to the edges of the top.

Before attaching the top to the cart, I routed an 1/8" chamfer on the top and bottom edges. Then I drilled countersunk shank holes in the rails of the cart and screwed the top in place, see drawing and detail 'b.'

FINISH. When it came to selecting a finish for this tool cart, I wanted to use something a bit tougher than my normal wipe-on oil finish. So instead, I brushed on a couple coats of a high-quality polyurethane finish. This will produce a layer of tough protection to help the cart stand up to the wear and tear of a shop environment. W

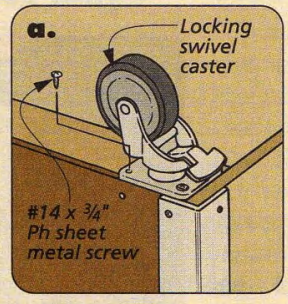

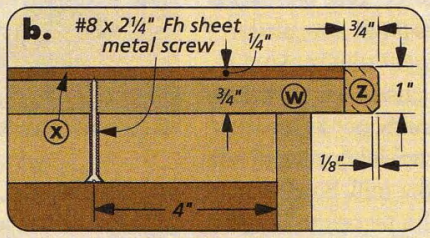

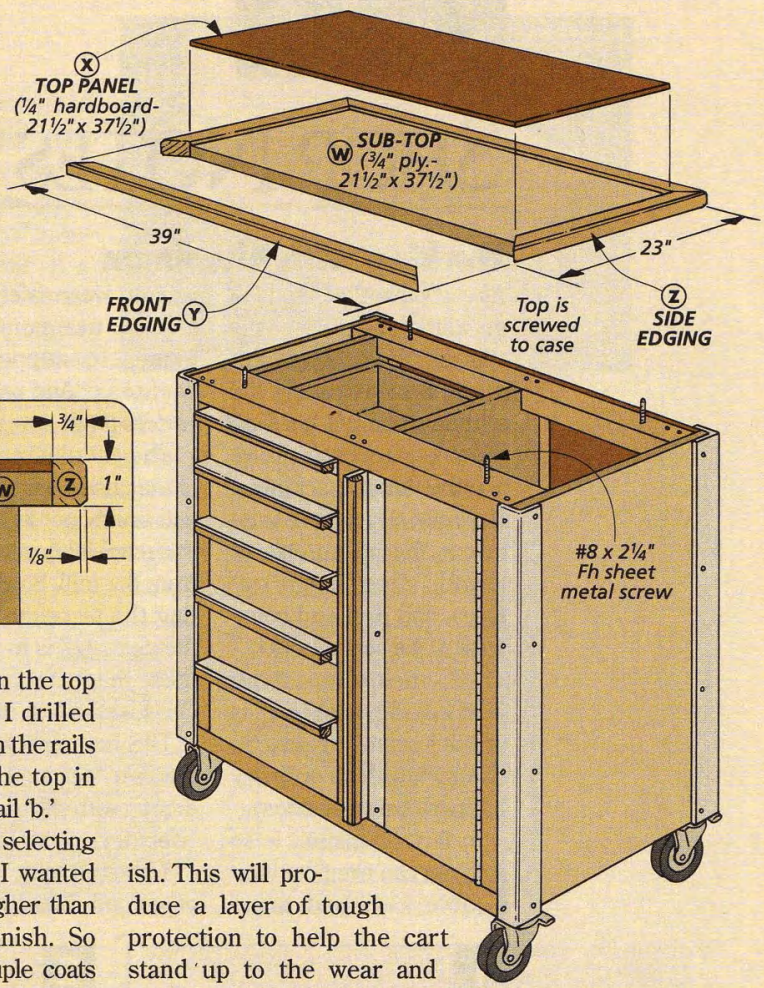

MATERIALS

A	Rails (4)	1 1/2 x 3 - 34 1/2
B	Stiles (6)	1 1/2 x 2 5/8 - 27
C	Bottom (1)	3/4 ply. - 15 3/4 x 35
D	End Panels (2)	3/4 ply. - 20 x 30
E	Back Panel (1)	1/4 hdbd. - 30 x 34 1/2
F	Dr. Slide Panels (2)	1/2 MDF x 18 3/4 - 28 1/2
G	L. Drwr. Fr./Back (6)	1/2 MDF - 5 1/2 x 11 13/16
H	S. Drwr. Fr./Back (4)	1/2 MDF - 4 x 11 13/16
I	L. Drwr. Sides (6)	1/2 MDF - 5 1/2 x 18
J	S. Drwr. Sides (4)	1/2 MDF - 4 x 18
K	Drawer Bottoms (5)	1/4 hdbd. - 11 13/16 x 17 1/2
L	L. False Fronts (3)	3/4 ply. - 5 7/8 x 13 3/16
M	S. False Fronts (2)	3/4 ply. - 4 1/2 x 13 3/16
N	Drawer Grips (5)	3/4 x 1/2 - 13 3/16
O	Tray Front/Back (2)	1/2 MDF - 1 1/2 x 10 3/4
P	Tray Sides (2)	1/2 MDF - 1 1/2 x 9
Q	Tray Bottom (1)	1/4 hdbd. - 8 1/2 x 10 3/4
R	Tray Runners (2)	1/4 hdbd. - 1 3/4 x 17
S	Shelf (1)	3/4 ply. - 17 3/4 x 17 15/16
T	Shelf Edging (1)	3/4 x 1/4 - 17 15/16
U	Door (1)	3/4 ply. - 13 1/16 x 26 7/8
V	Door Grip (1)	3/4 x 1/2 - 26 7/8
W	Sub-Top (1)	3/4 ply. - 21 1/2 x 37 1/2
X	Top Panel (1)	1/4 hdbd. - 21 1/2 x 37 1/2
Y	Fr./Back Edging (2)	3/4 x 1 - 39
Z	Side Edging (2)	3/4 x 1 - 23

CUTTING DIAGRAM & SUPPLIES

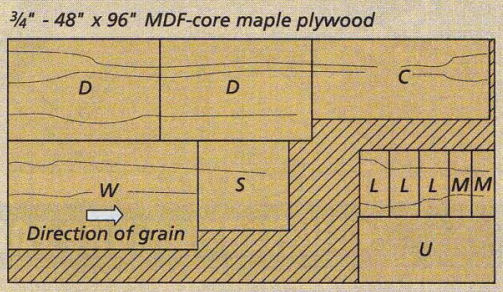

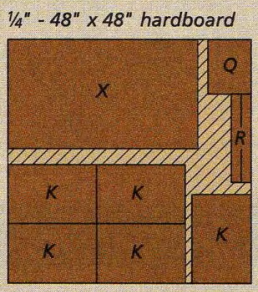

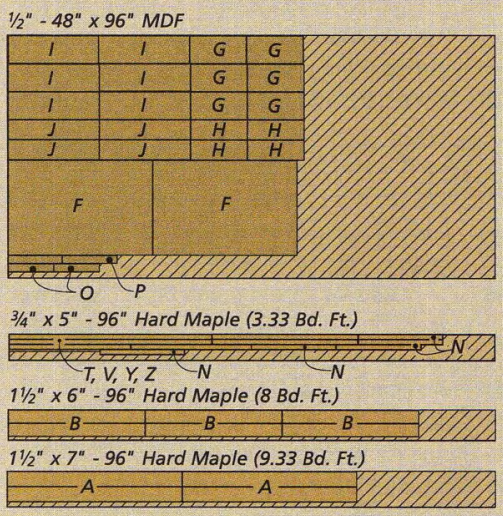

- (2) 1/8" x 2" x 2" Alum. Angle (8' lengths)
- (1) 1/8" x 1 1/2" x 1 1/2" Alum. Angle (8' length)
- (5 pr.) 18" Drawer Slides
- (1) 1 1/2" x 30" Nickel-plated Continuous Hinge
- (2) Roller Catches w/Strikes
- (4) 1/4"-dia. Shelf Supports
- (4) 4" Locking Swivel Casters
- (45) #8 x 5/8" Fh Sht. Mtl. Screws
- (32) #8 x 1" Fh Sht. Mtl. Screws
- (16) #14 x 3/4" Ph Sht. Mtl. Screws
- (13) #6 x 1" Fh Woodscrews
- (24) #8 x 3 1/2" Fh Woodscrews
- (4) #8 x 2 1/4" Fh Sht. Mtl. Screws

Also needed: 1/4"- 48" x 48" hardboard for back

SHOP NOTES

Working with Aluminum

As a woodworker, I tend to get a little intimidated at the thought of working with metal. But fortunately, the aluminum angle used on the tool cart doesn't involve a whole lot of machining. Basically, all you have to do is cut the aluminum to length, "clean" up the surfaces, and drill and countersink the screw holes.

The nice thing about working with aluminum is that it's relatively soft. So cutting it with an ordinary hacksaw isn't a problem.

In fact, aluminum is so soft you can even cut it on a table saw. Just make sure to wear safety glasses and use your miter gauge to support the workpiece. And use *only* a *carbide*-tooth saw blade.

The aluminum we purchased had a few scratches and scuffs, not to mention the machining marks left from the mill. So after cutting the pieces to length, the next step is to remove these marks and create a clean, smooth surface.

The first step in doing this is to wet sand the aluminum with silicon carbide (wet/dry) paper, see Fig. 1. I started with 100-grit paper and then continued on with 150, 180, and 220-grits. Next, the aluminum is buffed with an abrasive pad, see Fig. 2.

After getting the aluminum all buffed out, I noticed something. Every fingerprint stood out like a sore thumb (no pun intended). So to keep the aluminum looking nice, I wiped all the surfaces down with mineral spirits. Then I sprayed on a coat of clear lacquer, see Fig. 3.

Once the lacquer is dry, you can drill and countersink the screw holes. There's nothing unusual about this, but I did use a special type of countersink bit, see box below.

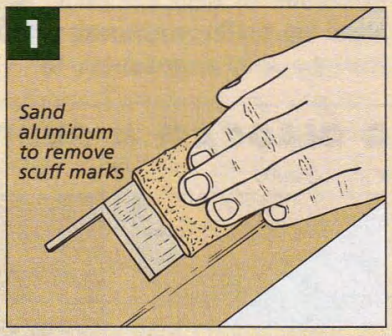

COUNTERSINK BITS FOR METAL

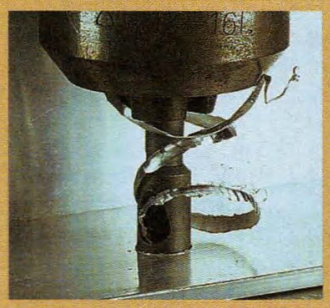

Because aluminum is such a soft metal, I didn't have any trouble drilling holes in it with ordinary twist drill bits.

However, when it came to countersinking the holes for the screwheads, I didn't use the same countersink that I normally use on my woodworking projects. Instead, I used a countersink designed especially for metal. (The ones I used are made by a company by the name of *Weldon*.)

Traditional countersink bits are "fluted." These flutes remove material by "reaming" out small chips. On wood, they do an adequate job of cutting. But on metals, they tend to "chatter", leaving a countersink with a wavy surface. These waves then prevent the head of the screw from fully seating.

But instead of flutes, the *Weldon* bits have a hole through the middle. The cutting edge of the bit is actually formed by the edge of this hole. And since there's only one cutting edge, you get a continuous, curly chip rather than a lot of shavings, see photo at left. The result is a smooth countersink.

Weldon countersinks come in various diameters for different screw sizes. And although they're designed to cut metal, they work equally well when countersinking holes in wood. (For sources, see page 35.)

Mortising for a Continuous Hinge

When making a shallow mortise for a continuous (piano) hinge, I typically use a straight bit and a hand-held router. But making the hinge mortise for the lap desk proved to be a bit more of a challenge.

For one thing, the back edge of the desk is beveled, see photo and Fig. 1. So rather than try to hold the router at an angle while making the mortise, I decided to use a router table instead. With a router table, the router remains flat while the desk is simply placed face down on the router table top.

Using a router table introduces a new problem. Since the hinge doesn't run the full width of the desk, the mortise is stopped at both ends. But with the desk placed face down on the router table, you can't see the ends of the mortise as you're routing.

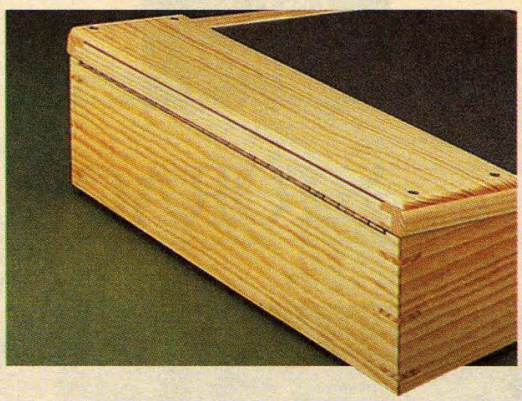

So instead of routing the mortise in one long, continuous pass, I "nibbled" away the waste in a series of short passes by moving the desk back and forth over the bit, see Fig. 2.

The key here is to start and stop the mortise about 1/8" away from the ends, see Fig. 2a. (I drew layout lines on the back of the desk to mark the endpoints.) Then the ends of the mortise can be squared up with a sharp chisel. W

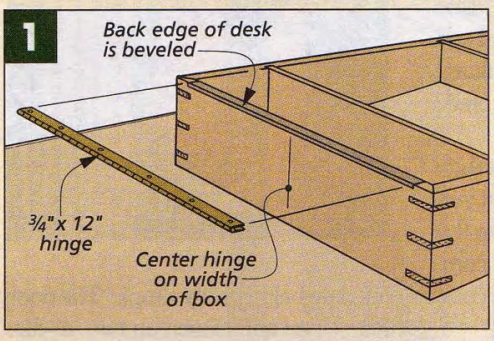

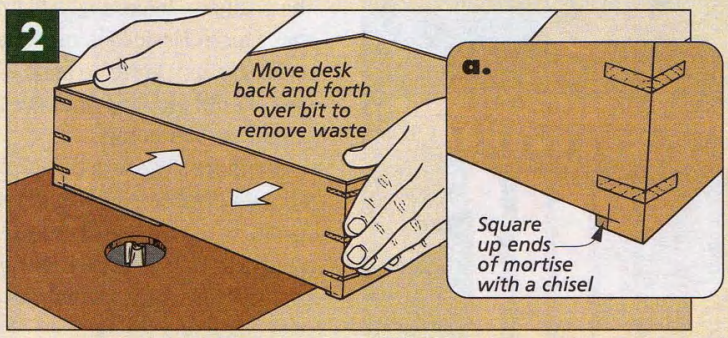

Slots for Shelf Pins

Whenever I use spoon-style shelf pins, I can usually count on the weight of the shelf to help hold it in place. But the shelves used with the storage pedestal are so small and light, I was concerned they might get knocked off the pins every time an item was removed from the shelf.

So instead of simply setting the shelf on top of the shelf pins, I routed stopped slots on the edges of the shelves to allow them to fit over the pins, see drawing and detail 'a'.

To do this, I clamped a stop block to the fence of my router table. Then, using an 1/8" straight bit centered on the thickness of the shelves, I routed a stopped slot on the edges of each, see details 'b' and 'c'.

Shop Note: Some shelf pins may fit a little too snug in an 1/8"-wide slot. If this is the case, you'll need to file down the pins slightly until they fit. W

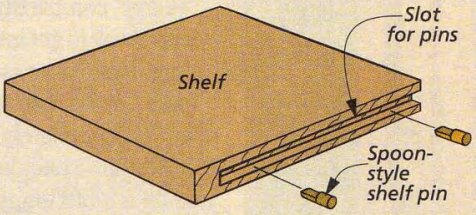

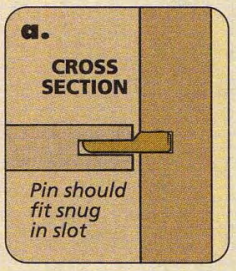

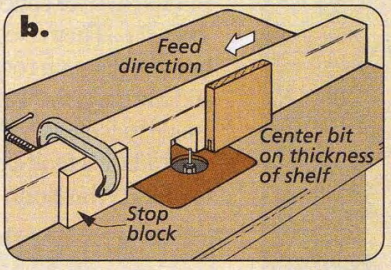

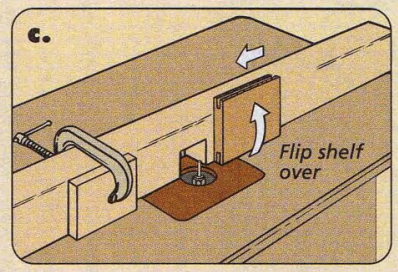

Cutting Wide Rabbets

The aluminum pulls we used on the tool cart are screwed into shallow, wide rabbets cut on the front of the drawers and door. But there are a couple of ways to make these rabbets.

One method is to cut the rabbets on a table saw. You can make the shoulder cut first, then raise the blade to make the cheek cut, see Figs. 1 and 1a.

The second option is to use a router table and a straight bit. Just raise the bit to match the depth of the rabbet (1/8") and position the fence to establish the shoulder, see Fig. 2. Then rout the rabbet by making several passes, moving the fence as needed, see Fig. 2a. W

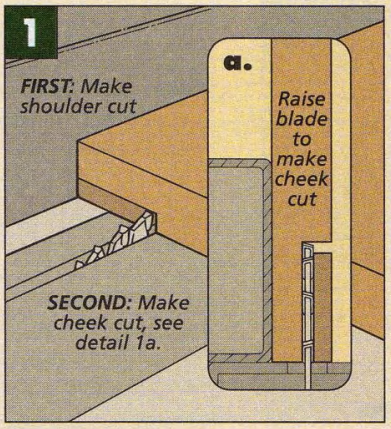

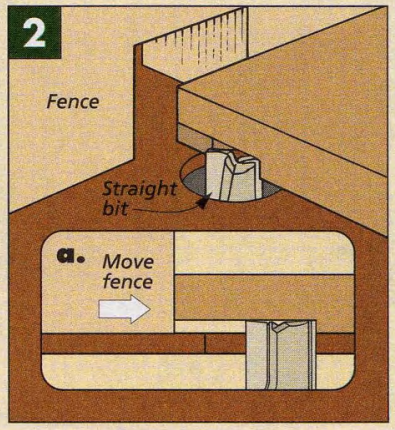

FEATURE PROJECT

STORAGE PEDESTAL

What you see is a classic-looking pedestal with a marble top. What you don't see is a door that opens to reveal a hidden storage compartment.

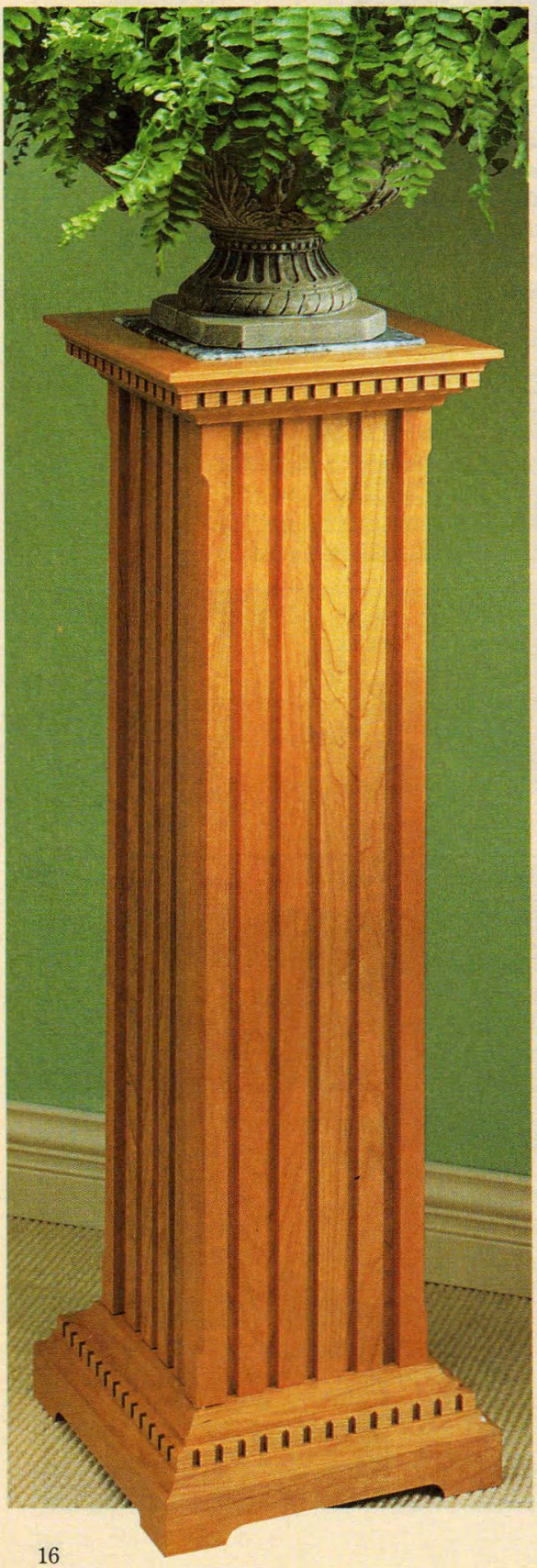

At first glance, there seems to be nothing about this pedestal that's out of the ordinary. It has all the features that make for a classic-looking pedestal and an interesting project to build — a fluted case, dentil molding, and even a piece of marble tile on top.

But there's more to this project than what you can see. In fact, it's what you *can't* see that makes it unique. On the inside, there's a secret storage compartment designed to hold videos, compact discs, and the like.

The real trick when designing the "secret" compartment was coming up with a way to get into it — an "invisible" door. But a door isn't an easy thing to hide. You have to make sure the hardware is completely out of view.

A brass knuckle, even a small one as on a knife hinge, would have been a dead giveaway. And I ruled out the European-style concealed hinges right away too. They're completely hidden, but they take up room inside the case and can get in the way. And I wanted the inside to look as "clean" as possible.

I'll admit it took a couple of attempts to "hide" the door, but the solution

ended up being pretty simple. The door pivots open and closed on two 1/8"-dia. steel pins. And to offset the pins enough to allow the door to open, there's a thicker post at each corner so the pin could be located farther away from the case sides, see the Top Section View on page 17. The thicker posts have another benefit: The front right post also serves as a handle for the door.

OPTIONS. Besides the secret compartment, there are a couple of optional features you might want to consider. If you don't want to use marble tile in the top, you can substitute a wood panel. And there's also an optional CD case that fits inside. For more on these options, see page 23.

CUTTING DIAGRAM

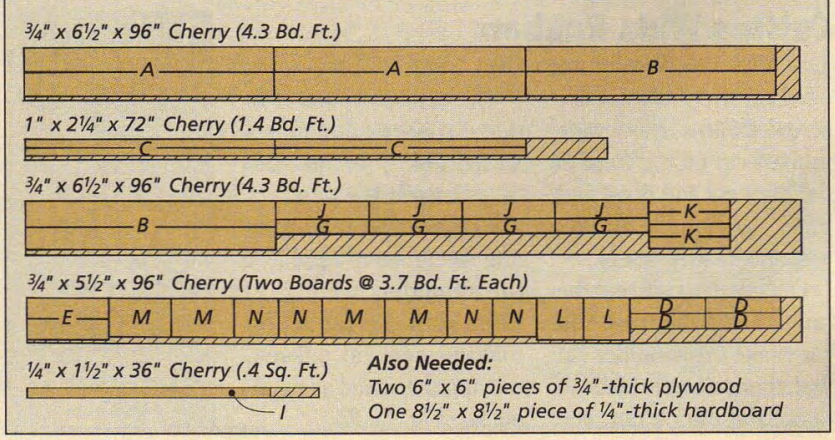

Also Needed:
Two 6" x 6" pieces of 3/4"-thick plywood
One 8 1/2" x 8 1/2" piece of 1/4"-thick hardboard

Construction Details

OVERALL DIMENSIONS:
36" x 11½" x 11½"

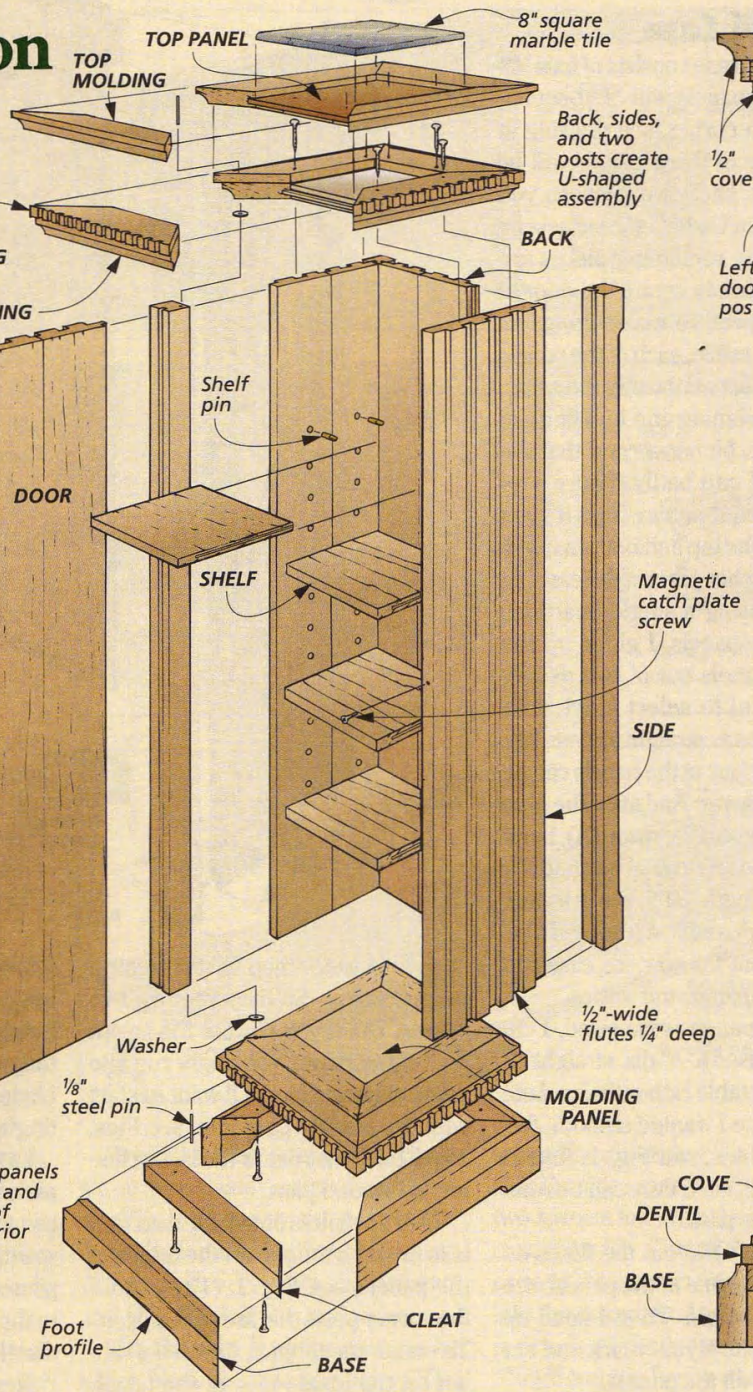

SIDE SECTION VIEW

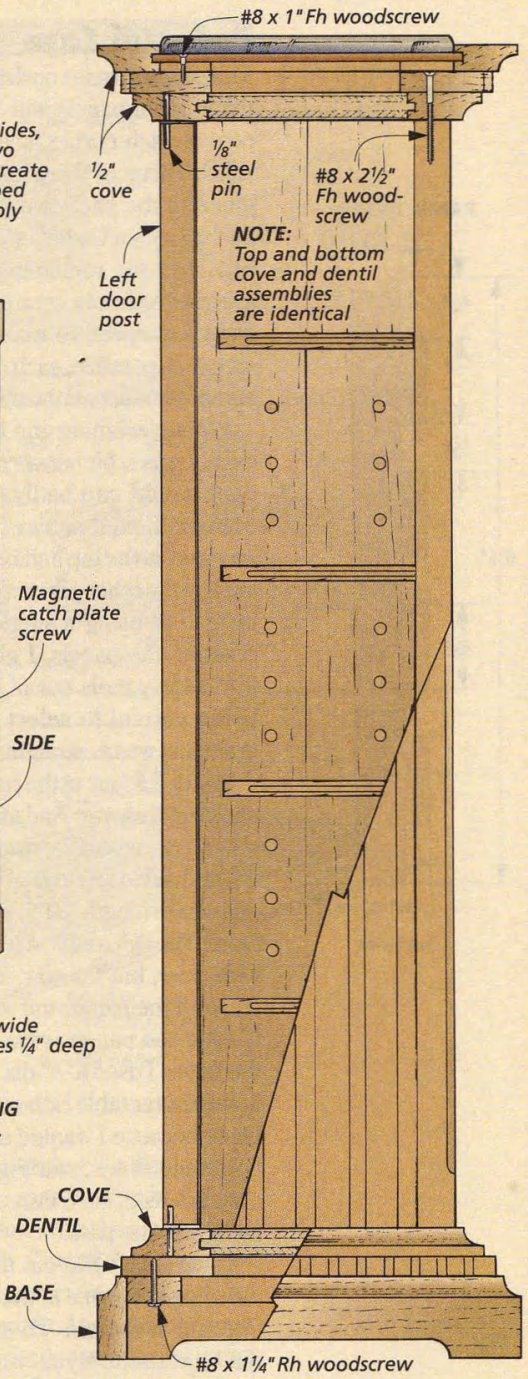

TOP SECTION VIEW

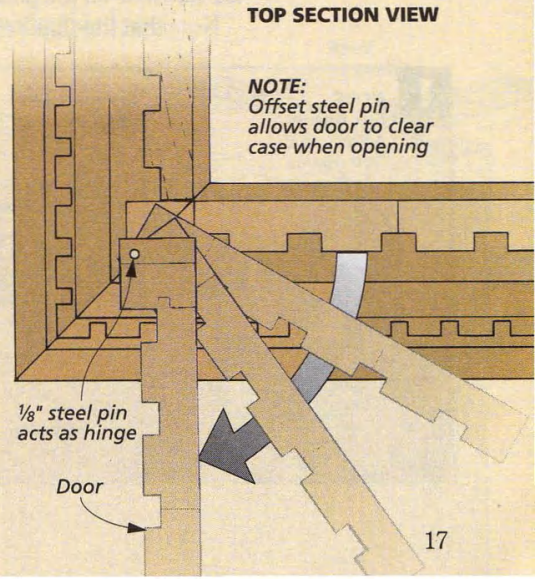

MATERIALS & SUPPLIES

Pedestal		Options	
A Door/Back (2)	¾ x 6¼ - 30½	**L** Shelves (4)	½ x 5¾ - 5⅜
B Sides (2)	¾ x 6¼ rgh. - 30½	**M** CD Case Sides (8)	¾ x 4¾ x 7⅝
C Posts (4)	1 x 1 - 30½	**N** Case Top/Btm. (8)	½ x 4¾ x 5½
D Cove Molding (8)	¾ x 2 - 9½	• (12) #8 x 2½" Fh Woodscrews	
E Molding Panels (2)	¾ ply. - 6 x 6	• (2) ⅛" x 1¾" Steel Pins	
F Dentil Molding (8)	½ x 2½ - 10¼	• (2) ⅛" i.d. x ⅜" o.d. Steel Washers	
G Top Molding (4)	¾ x 1¾ - 11½	• (1) 8" x 8" Marble Tile	
H Top Panel (1)	¼ Hdbd. - 8½ x 8½	• (8) #8 x 1" Fh Woodscrews	
I Filler Strips (1)	¼ x 1½ - 30 In.	• (8) #8 x 1¼" Rh Woodscrews	
J Base (4)	¾ x 2¼ - 11½	• (16) ¼" Spoon-style Shelf Pins	
K Cleats (4)	¾ x 1½ - 10	• (1) Magnetic Catch w/Screw	

Pedestal Case

The pedestal case consists of four ¾"-thick fluted panels with a 1"-square post at each corner, see drawing at right. Three of these panels will be glued to the back two posts so you end up with a U-shaped case assembly. Then the remaining pieces are glued together to create the door in front. However, to make things as simple as possible, each of the panels and posts start off exactly the same.

When designing and building the case, I was a bit concerned that the door would cup badly. There's no frame to hold it square, and it's not screwed to the top and bottom molding like the other parts of the case. So instead of using a single board for creating the panels, I glued up the 6¼"-wide panels out of two pieces, being careful to select stock with grain that was as straight as possible.

PANELS. All four of the panels can be glued up this way. And after the glue is dry, you can cut the **door (A)**, **back (A)** and **sides (B)** to final width (6¼") and rough length (31"), see drawing. Note: The sides will be trimmed 6⅛" wide later, but for now, it's easier to leave all the panels the same.

After the panels were sized, I cut the flutes. I used a ½"-dia. straight bit in the router table rather than a dado blade because I wanted smooth, flat-bottomed flutes, see Fig. 1. And at only ¼"-deep, each flute can be routed in just one pass.

To do this, I laid out the flutes on the end of only one of the panels, see drawing in margin. Then I lined up the bit with the layout mark and cut the flutes on all the panels.

Note that the flutes on the outside are a little wider than ½" (to create a tongue later). So they require two passes. But if you start at the layout line and work out, you might run into some chipout. So you'll want to start with the outside pass first, see Figs. 1 and 1a. Then rout to the layout line on the second pass.

With the flutes routed, the next step is to create a tongue on the edges of the panels, see Fig. 2. (These hold the corner posts that are added later.) To create the tongue, I routed a rabbet on the inside face of the panel. The width of the tongue should be ⅛". But as for the thickness of the tongue, you'll want to sneak up on the height of the bit until the remaining tongue fits into a kerf left by your saw blade, see Fig. 2a. (Test the fit by cutting a test kerf in a piece of scrap.)

POSTS. At this point, you can set aside the panels and begin working on the four **posts (C)** for the corners, see drawing above. These pieces are planed and ripped 1" square and cut to the same rough length as the panels. (I cut my posts 31" long.)

Next, I cut ⅛"-deep grooves on the inside faces of the posts, see Fig. 3.

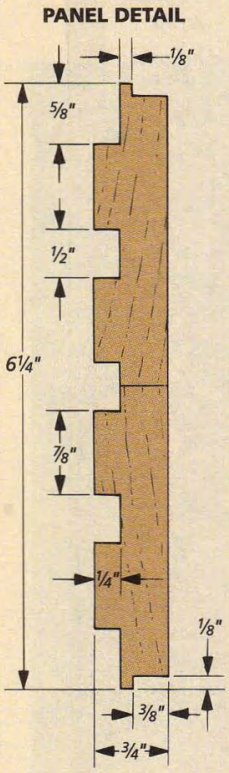

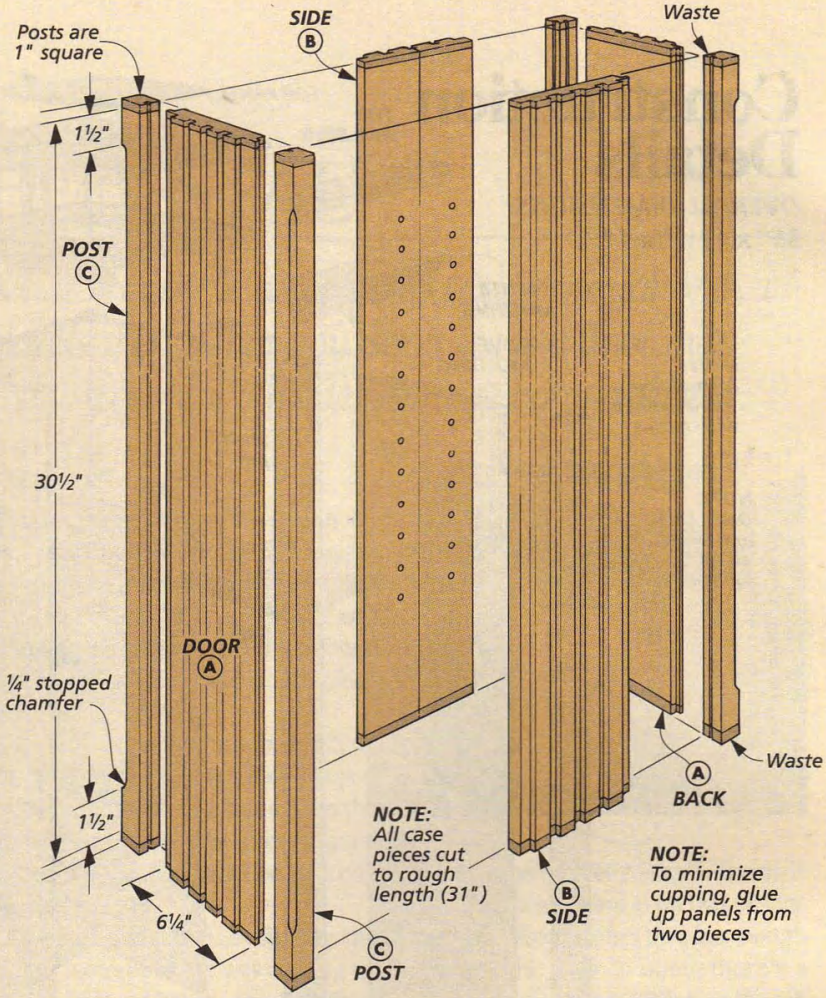

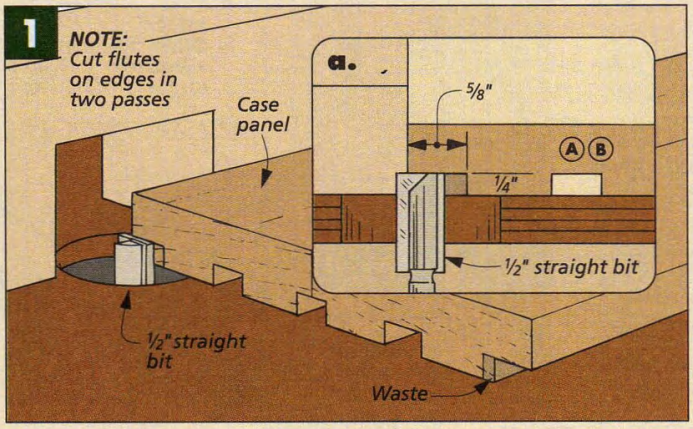

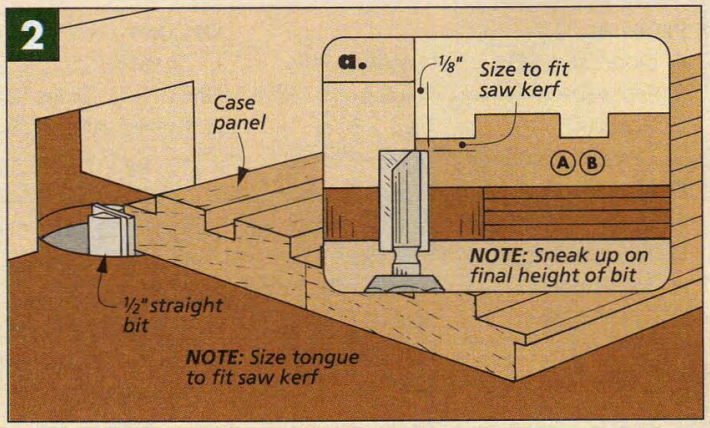

These grooves are to hold the tongues on the panels. And they're positioned so that the inside face of the panels will be flush with the inside faces of the posts, refer to Fig. 4a.

The thing to keep in mind is not all four posts are exactly the same. The door posts have only *one* groove each to hold the door panel, see Fig. 3a. However, each back post has *two* grooves — one to hold the back panel and one for a side panel, see Fig. 3b. The fence position is the same for both grooves, but to cut them close to the inside corner of the post, you'll need to flip and rotate the pieces.

PANEL & POST ASSEMBLY. At this point, the posts can be glued to each side of the door and back panels, see Figs. 4 and 4a. When doing this, just make sure that the inside faces of the posts and panels are flush.

Don't worry too much about getting the ends perfectly even during assembly. After the glue is dry, the next step is to trim a little off each end, cutting the panel assemblies (and side panels) to finished length (30½"), see drawing on page 18.

Shop Note: These long workpieces are a bit unwieldy, so I attached an auxiliary fence to my miter gauge to add some support. And I clamped a stop block to the fence to make sure they all ended up the same length.

There are still a few odds and ends left. On the sides, I trimmed off the tongue on the front edge of each panel, see Fig. 5. Then I drilled two sets of holes on the inside of each side panel for the ¼"-dia. shelf pins that hold the shelves. (You might want to create a hardboard template for drilling these 5/16"-deep holes.)

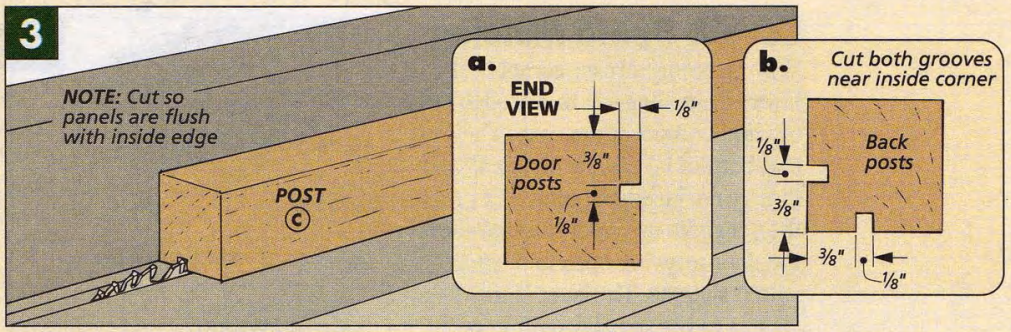

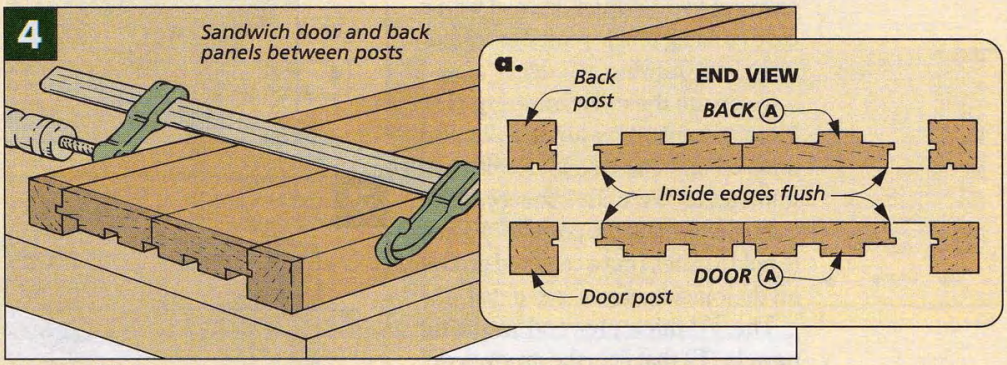

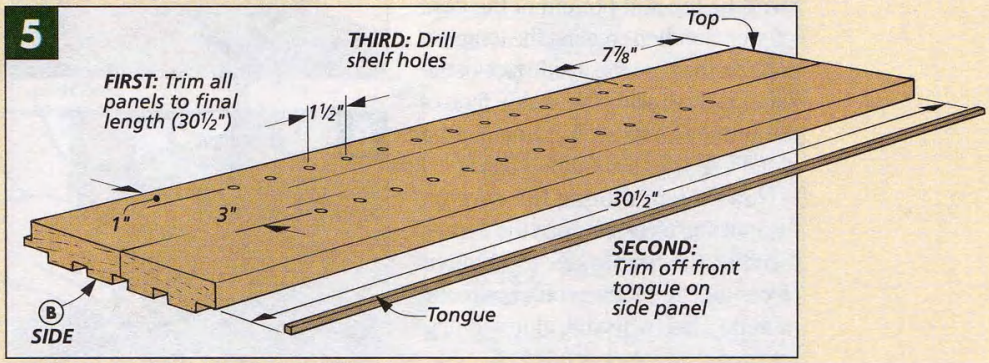

Finally, I routed a stopped ¼" chamfer on the outside corner of each post, see Fig. 6. These chamfers stop 1½" from the top and bottom of the post. And to do this, I simply marked start and stop lines on the router fence.

CASE ASSEMBLY. Now the case can be assembled, see drawing below. The trick when clamping up this U-shaped assembly is keeping it square. So to hold the sides square to the back, I cut two spacers to match the inside of the case (6" x 6"). Cut off the corners to prevent the spacers from being glued into the assembly. And when the glue is dry, don't throw the spacers away. They'll come in handy when attaching the molding that's added next.

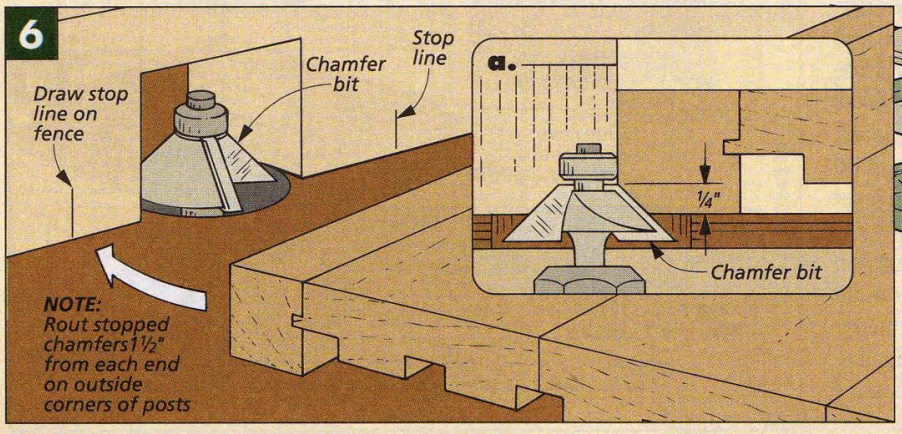

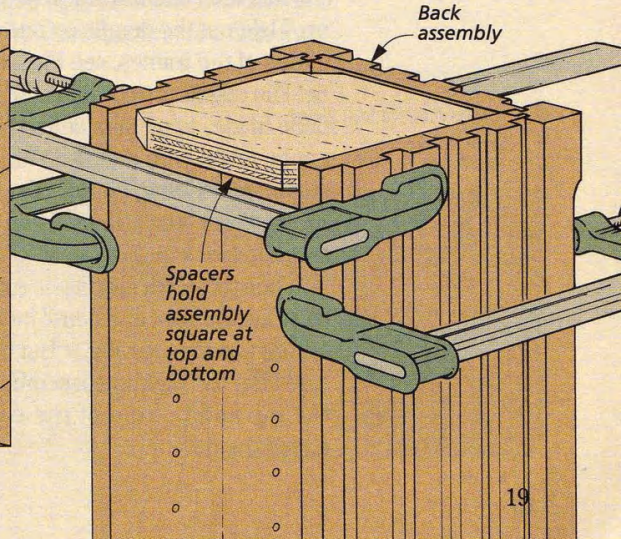

Cove & Dentil Molding

With the pedestal case complete, two layers of molding can be added to the top and bottom of the case. The top and bottom layers are identical, and they're not just decorative. They trap the door with two steel pins that allow the door to swing open and shut.

COVE MOLDING. The layer of molding closest to the top and bottom of the case are two ¾"-thick frames with a cove molding profile routed on all four sides, see drawing and detail 'a.'

To create the **cove molding (D)**, I started with 2"-wide blanks and mitered them so I'd end up with two frames that were 9½" square. (The frames overhang the posts ¾".) Then to hold a panel, I cut a centered groove on their inside edges, see detail 'a.'

The ¾"-thick plywood **molding panels (E)** that fit in the grooves will form the top and bottom of the case interior. So when creating the tongues, position them so the inside face of the panel is flush with the inside face of the frame. Then each frame can be glued together around the panel.

Now, before routing the cove on the molding pieces, I glued the frames together. (It's hard to glue the mitered pieces together if the profile is already routed.) Then when the glue was dry, I routed a ½" cove, see Fig. 7.

DENTIL MOLDING. The next layers to add are the dentil molding, see drawing above. These ½"-thick frames are built the same way as the cove molding (but there's no plywood panels).

First, I mitered 2½"-wide blanks to length to create two 10¼"-square **dentil molding (F)** frames, see drawing. (I allowed a ⅜" overhang.)

Then after the frames were glued up, I laid out the dentils on one edge of one of the frames, see Figs. 8 and 8a. The dentils are cut with a ¼"-wide dado blade, using an auxiliary miter gauge fence with a stop. With each stop block setting, cut one dentil on *each* edge of both frames. Then reset the stop block and repeat.

When the dentil molding is cut, you can glue the cove and dentil molding frames together, see Fig. 9. But before screwing the molding assemblies to the top and bottom of the case, I added the door.

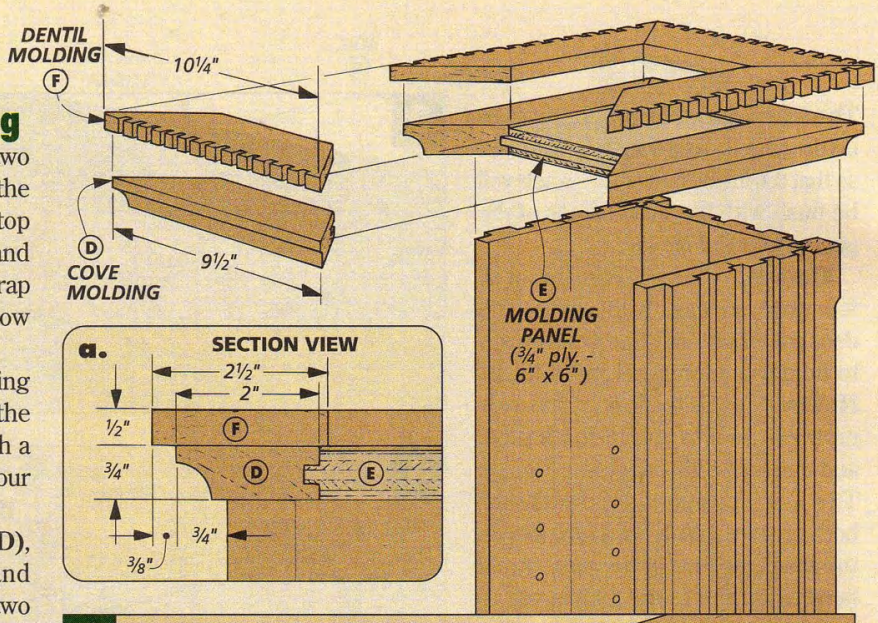

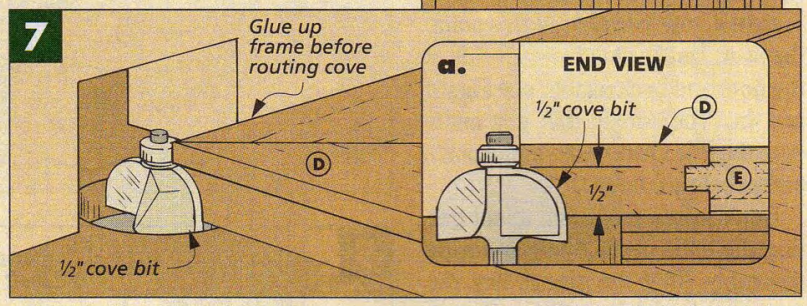

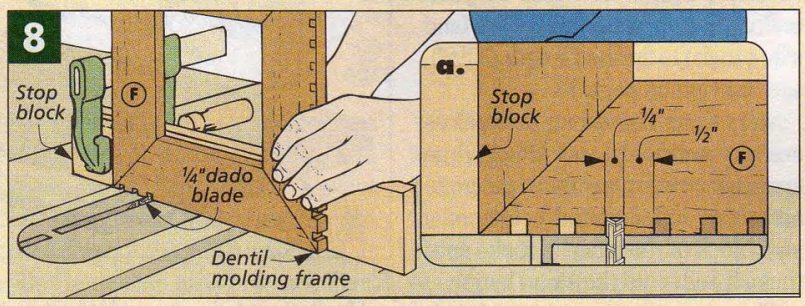

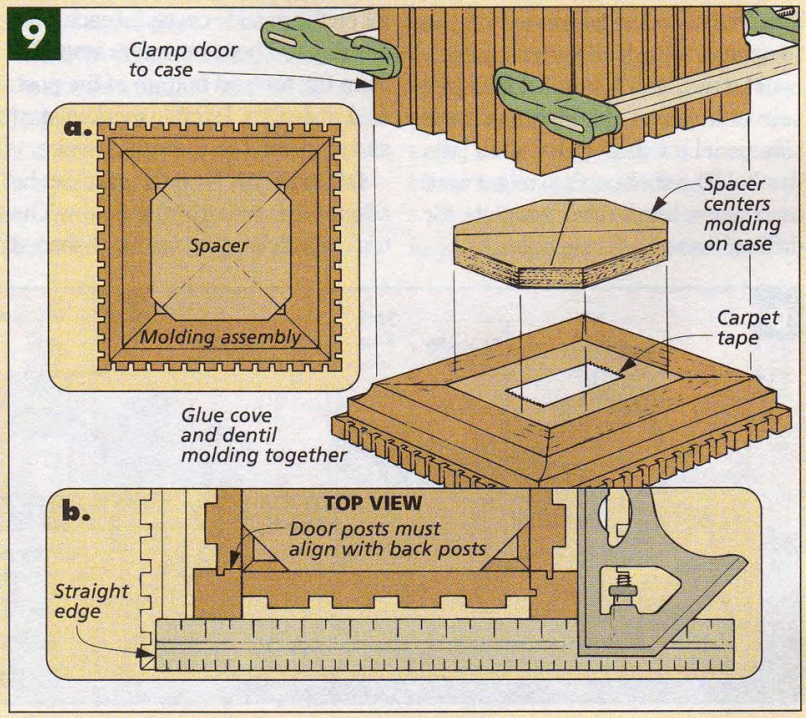

Adding the Door

The door is sandwiched between the two molding assemblies and pivots on steel pins. And to prevent the door from rubbing at the bottom against the molding, I placed thin washers between the door and the molding at both the top and bottom.

The first step is to clamp the door to the front of the case, see Fig. 9. Just make sure that the posts in front and back line up, see Fig. 9b.

Next, the molding assemblies can be set in place so they're centered at the top and bottom of the case. Here's where the spacers used earlier really come in handy. I carpet taped one to the inside face of each assembly, see Figs. 9 and 9a. When set in the case, the spacer centers the molding and keeps it from shifting.

With the molding temporarily in place, I traced the left corner of the door at the top and bottom, see Fig. 10. By measuring in 3/16", you'll have the exact position of the pilot holes for the steel pins, see Fig. 10a.

Now lift the molding assemblies off the case and drill the holes. To make sure they're straight, it's a good idea to use the drill press, see Fig. 11. And while you're at it, you can also lay out and drill the countersunk shank holes for screwing the molding to the case, see Fig. 11a.

With the pilot holes drilled, it's time to "transfer" them to the door. I set the molding back on the case and used the pilot holes as a guide for drilling into the door, see Figs. 12 and 12a.

There's still one more thing to do before you can attach the molding and door. The door needs to be trimmed slightly so it doesn't rub against the molding, see Fig. 13. I trimmed my door slightly less than the thickness of two steel washers.

After the door was trimmed, I clamped it back to the case, making sure the gaps at the top and bottom were the same. Then I slipped a washer between the molding and the door at the top and bottom and added a pin to the hole, see drawing and detail 'a' below. (This pin should fit pretty snug. Otherwise the fit of the door will be sloppy.) Trim the pins flush with the outside of the molding. And don't worry about gluing it — the top and base of the pedestal will trap the pin when they're added later.

Finally, with the door captured between the molding, I screwed the molding assemblies to the case and removed the spacers, see drawing.

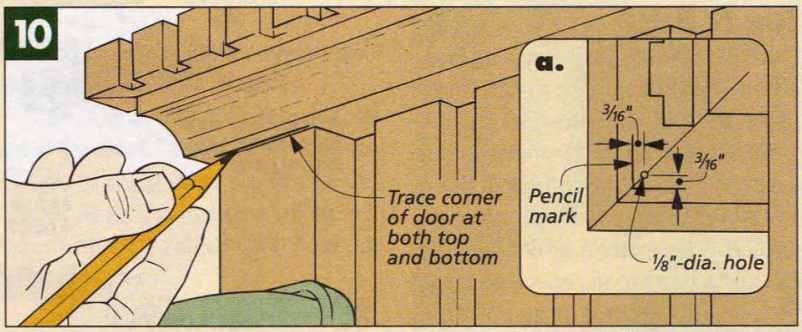

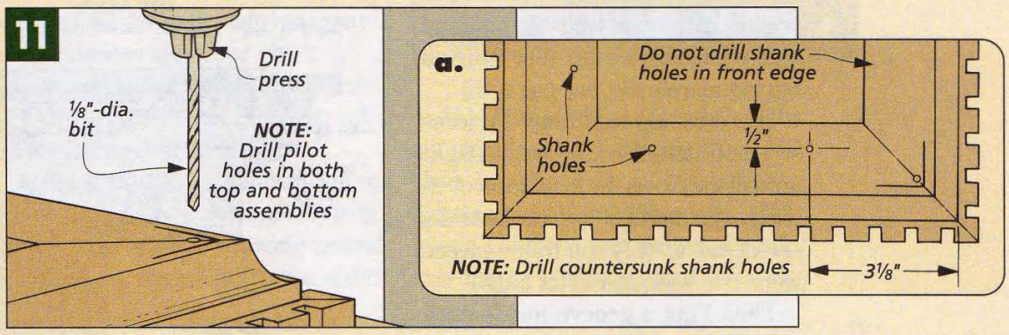

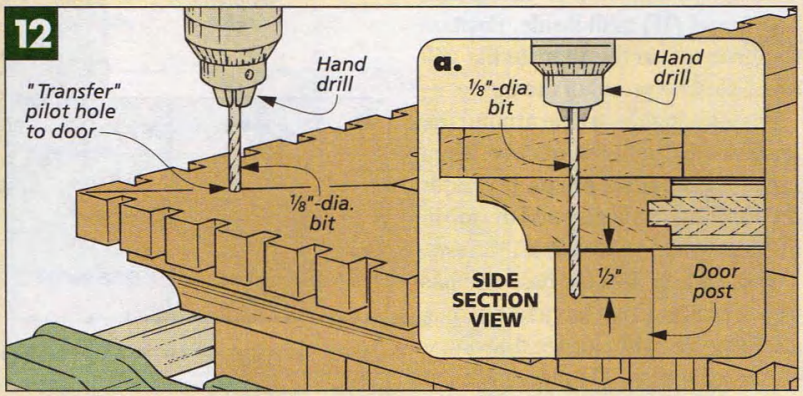

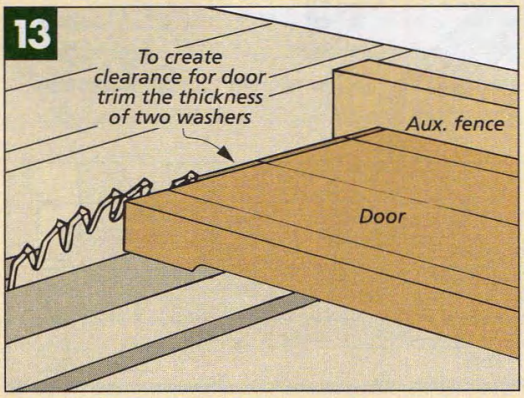

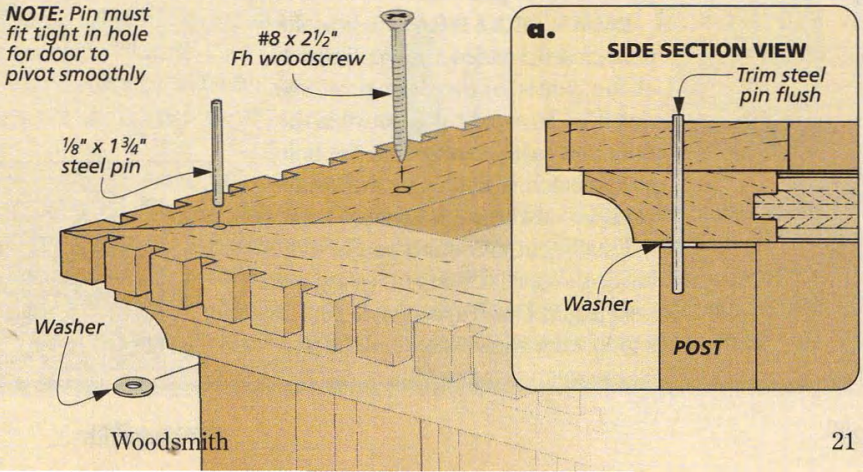

Top & Base

Once the molding is screwed in place, all that's left is to add the top and base of the pedestal, see drawing.

TOP FRAME. The top is similar to the cove molding already attached. But it has a hardboard panel that supports a piece of 8"-square marble tile. (You can add a hardwood panel instead of the marble, see next page.) Marble tile isn't always exactly 8" square, so you need to have your tile on hand before building the top. (For more on buying marble tile, see page 35.)

I sized the **top molding (G)** pieces so the finished frame wraps tight around the tile on the inside *and* overhangs the dentil 5/8" on the outside, see detail 'a.' (My top frame pieces were 1 3/4" wide and 11 1/2" long.)

Then I cut a groove inside each frame piece and cut a 1/4" hardboard **top panel (H)** to fit inside. Position the grooves so the marble tile will stand slightly proud of the frame.

After gluing the frame around the hardboard, I routed a 1/2" cove. Then I glued some **filler strips (I)** under the hardboard and screwed the top to the dentil molding with #8 x 1" screws.

BASE. Like the top, the base also has a cove profile. But it has a foot profile along the bottom too, see drawing.

After the **base (J)** pieces are cut to width (2 1/4"), I glued a 1 1/2"-wide **cleat (K)** to the inside edge of each piece, flush with the top edge. Then I mitered these pieces to the same length as the top pieces (11 1/2").

Next, I laid out and cut a foot profile on each with a band saw, see detail 'd.' After the base pieces have been glued into a frame, I routed a 1/2" cove profile around the top edge. Now the base assembly can be screwed to the bottom of the pedestal.

MAGNETIC CATCH & SHELVES. To hold the door closed, I added a magnetic catch at the center of the door post, see detail 'b.' To avoid a gap between the door and case, countersink the hole so the catch is flush. For the strike-plate, I used a brass-plated steel screw.

Finally, cut four **shelves (L)** to fit inside the case. (Or add CD cases, see next page.) I used spoon-style pins to support the shelves, but hid the pins in grooves, see page 15.

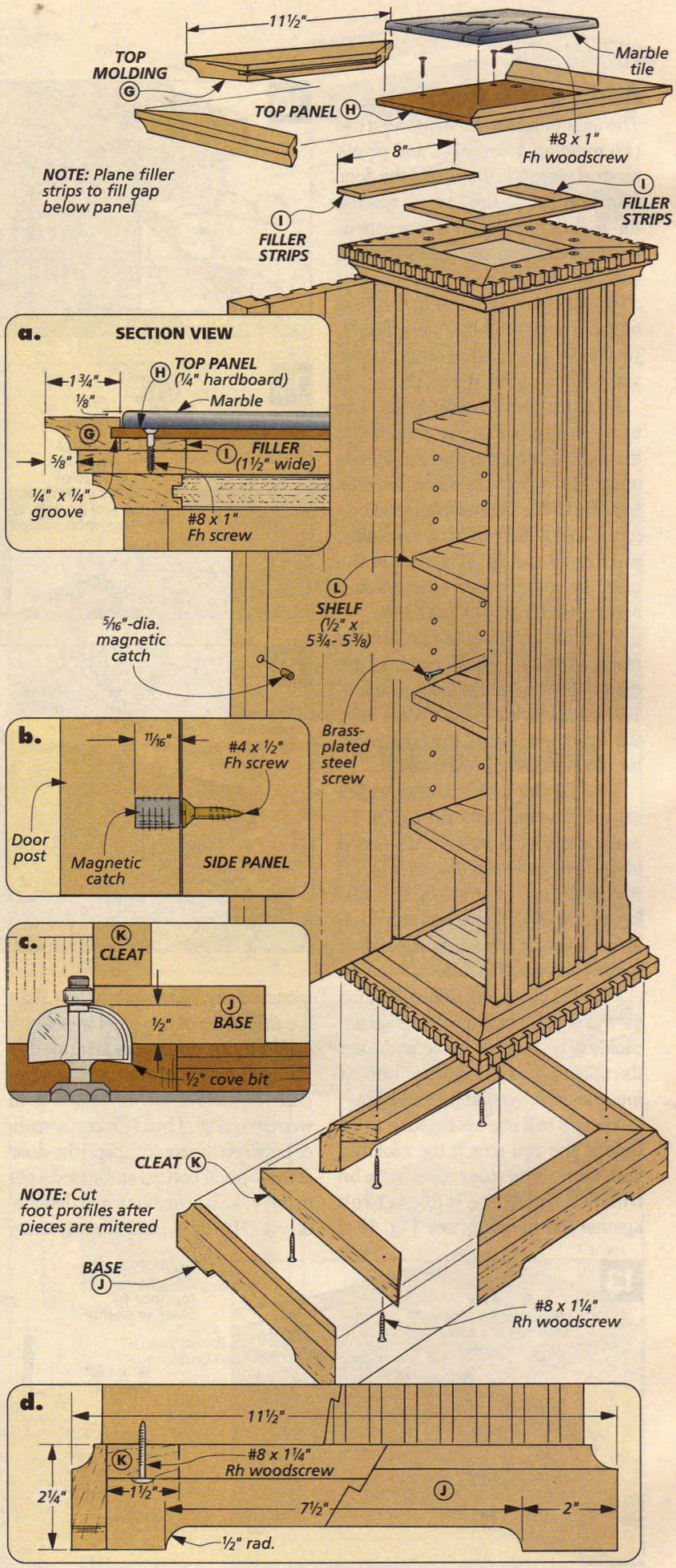

Optional CD Case

The inside of this pedestal is perfect for holding compact discs. But instead of buying plastic CD holders, I made my own, see photo at right. Each case holds twelve discs, and they're designed so you can stack four cases inside the pedestal. (They'll also sit on the shelf pins in case you want to use both shelves and CD cases.)

SIDES. The first thing to do is cut the two **sides (M)** for each case to size from ¾"-thick stock, see drawing at right. (Mine were 4¾" x 7⅝".) These pieces are sized to stack four high inside the case with no gap at the top. So it's a good idea to make sure you can fit four sides inside your case.

Next, to make it easier to feed the CD's into the case, tilt the saw blade 45° and bevel the front edge of each side piece, see Figs. 1 and 1a.

The CD's fit into 7/16"-wide dadoes cut in the sides. I laid out these dadoes on one of the pieces, starting at the center. At the ends, there will be ½" left over for the rabbets that hold the top and bottom.

When the dadoes are laid out, raise the dado blade to make a ¼"-deep cut, and use a stop block to make sure all the dadoes align, see Fig. 2.

After the dadoes were cut, I raised the blade and cut the ½"-deep rabbets on the ends, see Fig. 2a.

TOP & BOTTOM. Now all that's left to do is cut a **top** and **bottom (N)** to fit in the rabbets, see drawing below right. These pieces match the width of the sides (4¾"). And their length should allow the assembled case to slide into the pedestal without any gaps on the sides. (Mine were 5½" long.) Then the four pieces of each case can be glued together.

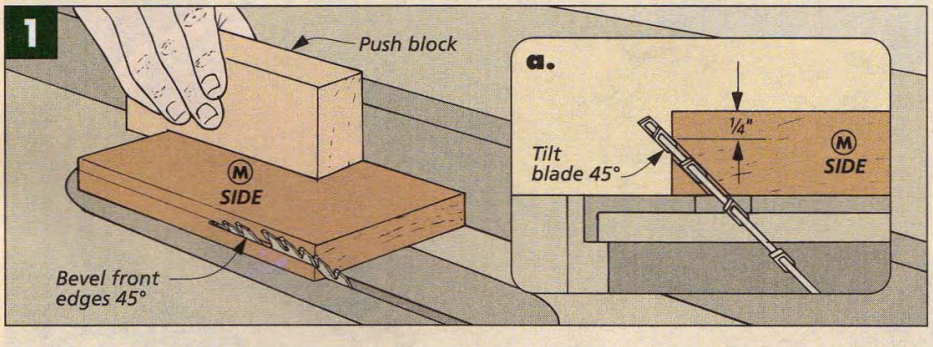

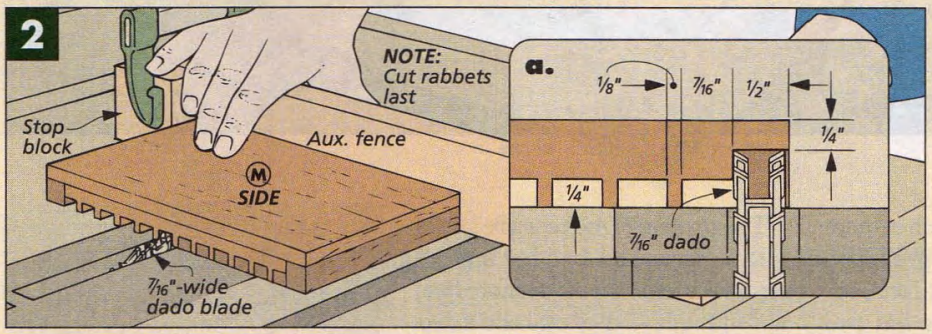

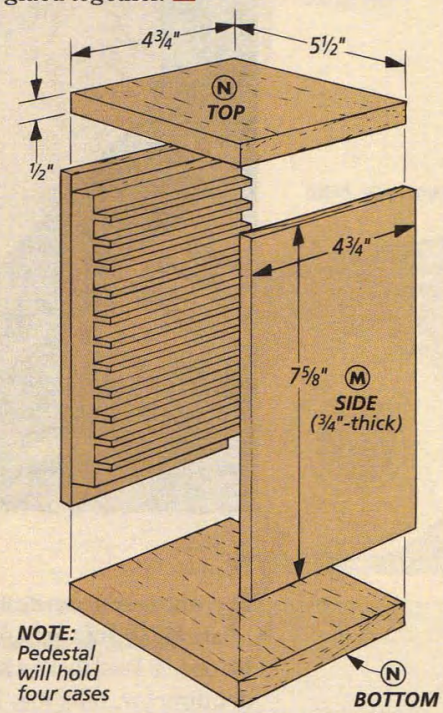

OPTIONAL WOOD TOP

Although our pedestal holds a piece of marble, it also looks nice with a wood panel instead, see photo at right.

I started by gluing up a blank and then trimming the panel ½" wider and longer than the opening in the frame. (The thickness of the blank should be the depth of the opening in the top plus an ⅛" or so, see drawing at left.)

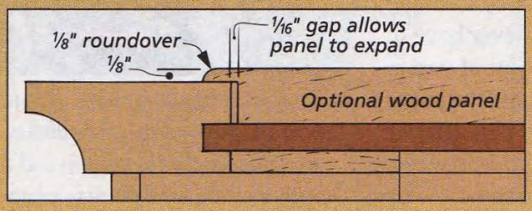

With the panel cut to size, I rabbeted the bottom edge so the panel would fit into the opening. To allow room for expansion, cut the rabbet wide enough to create a 1/16" gap at each edge. Then sneak up on the depth of the rabbet so the tongue rests on the top frame.

Finally, round over the top edge of the panel starting with the ends, and set (do not glue) the panel into the opening.

LAP DESK

Here's a lap desk for markers and crayons — or pencils and compasses. And you won't need to worry about running out of paper anytime soon.

So who needs a lap desk when there are lap top computers? Well, kids for one. At least that's what Todd, our art director, tells me. He has two daughters who go through crayons and paper faster than I go through sandpaper and glue. And this desk is sized just right for them.

Next, Todd pointed out that a lap desk is handy to have in the shop too. And he's right. There's never enough bench space to sketch up an idea for a jig or write a materials list. (And if there is space on the bench, it usually has a layer or two of dust, anyway.)

By this time, I was sketching some design ideas. I wanted to keep the desk inexpensive and simple. So it's built with pine, ¼" plywood, and a small piece of plastic laminate.

The corners of the case are joined with miters. And I added splines across the joint. These do more than add strength — they also add a decorative touch. For more on adding decorative splines, check out the article on page 30.

While we were working out the design, Todd suggested an intriguing feature: create a compartment that would hold a 12"-wide roll of paper. The paper would feed out the back and be held down by a couple guides. This way, you never have to worry about running out of paper. And you don't have to hold the paper in place when drawing. Plus, there's still plenty of room inside for pencils, triangles and compasses — or crayons, markers and coloring books.

▲ *The guide bar does more than just hold the paper down. It's also a straightedge that helps you end up with a clean, straight tear when removing your masterpiece.*

Construction Details

OVERALL DIMENSIONS:
17¾" x 13⅝" x 4³⁄₁₆"

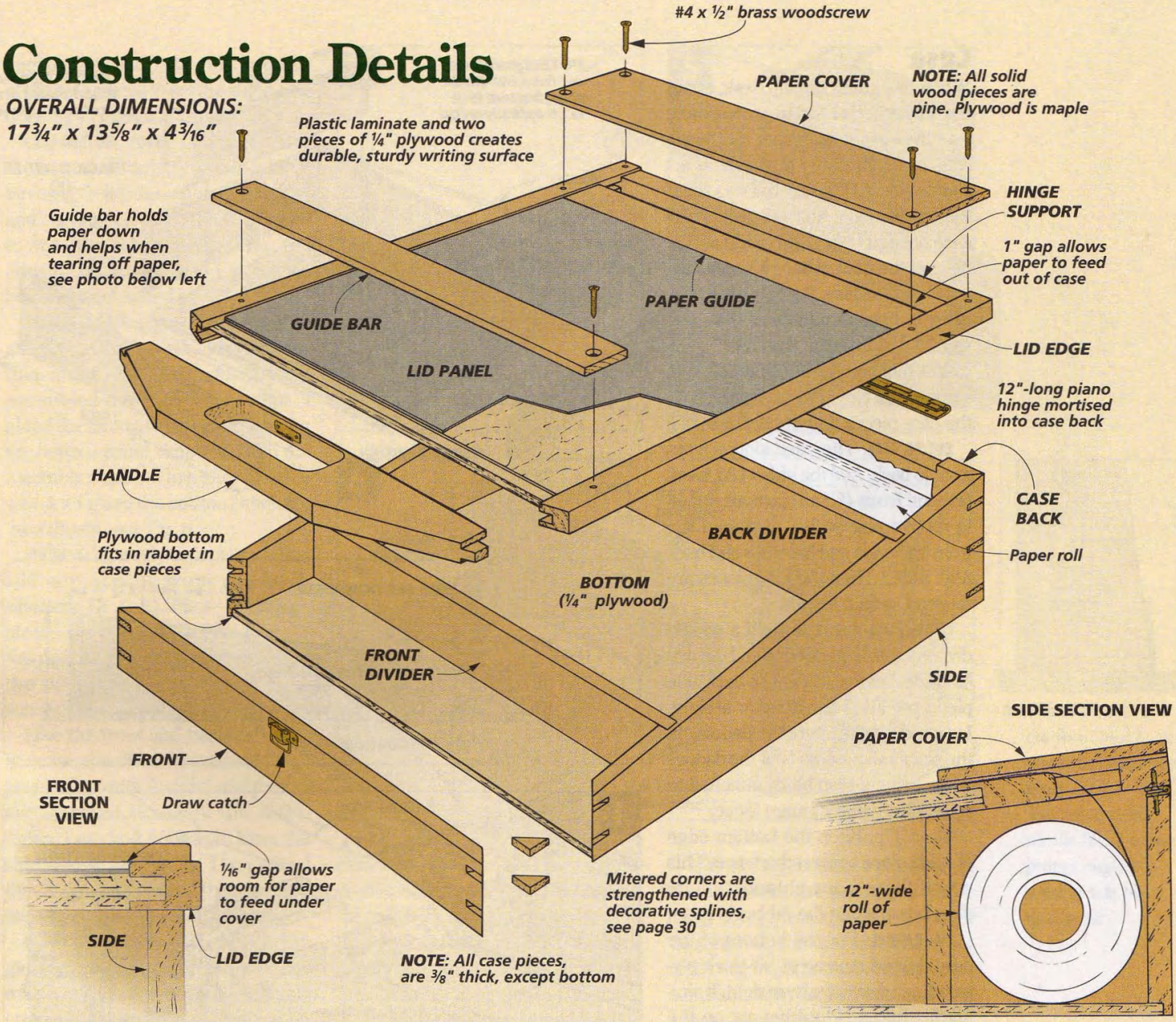

MATERIALS & SUPPLIES

A	Sides (2)	⅜ x 3¾ rgh. - 15½
B	Back (1)	⅜ x 3¾ rgh. - 13¼
C	Front (1)	⅜ x 1¾ rgh. - 13¼
D	Bottom (1)	¼ ply. - 13 x 15¼
E	Front Divider (1)	⅜ x 2 rgh. - 13
F	Back Divider (1)	⅜ x 3 rgh. - 13
G	Lid Panels (2)	¼ ply. - 12⅞ x 12½
H	Handle (1)	7⁄16* x 2½ - 12⅞
I	Paper Guide (1)	7⁄16* x 1½ - 12⅞
J	Hinge Support (1)	7⁄16* x ¾ - 12⅞
K	Lid Edges (2)	½ x ¾ - 17¾ rgh.
L	Paper Cover (1)	3⁄16 x 3½ - 13⅜
M	Guide Bar (1)	3⁄16 x 1½ - 13⅜

* Size to match the lid panels and laminate

- (1) 12" Piano Hinge w/Screws
- (1) Draw Catch w/Screws
- (6) #4 x ½" Fh Brass woodscrews

CUTTING DIAGRAM

½" x 5½" - 48" Pine (1.8 Sq. Ft.)

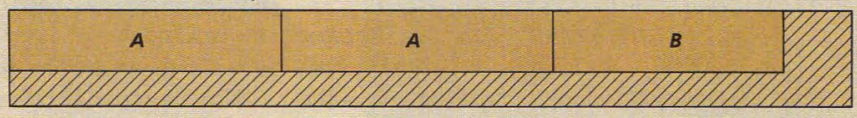

½" x 3½" - 48" Pine (1.2 Sq. Ft.)

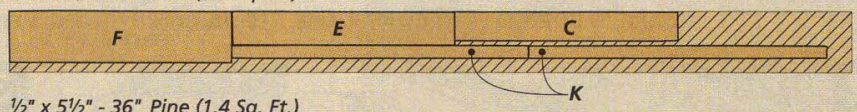

½" x 5½" - 36" Pine (1.4 Sq. Ft.)

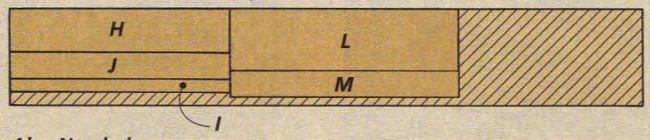

Also Needed:

One 13" x 13" piece of plastic laminate
Two 13" x 13" pieces of ¼"-thick plywood
One 13" x 15¼" piece of ¼"-thick plywood

Case

When designing the lap desk, about the only criteria I had to work around was the size of the paper. (12"-wide rolls are commonly available at art supply stores.) The 12" roll was about 2¾" in diameter. So the inside of the case needed to be 12½"-wide and 3" deep at the back where it's stored.

Other than size, the only other thing to keep in mind was the weight. I didn't want the case to get too heavy, so I planed some stock down to ⅜"-thick for the case pieces and the dividers.

CUT TO SIZE. The case slopes from front to back. And the **sides (A), back (B)** and **front (C)** all start out ripped to an oversize width. (I ripped the front 1¾" wide and the sides and back 3¾" wide.) Then the four pieces are mitered to final length.

CUT DADOES. Next to hold a couple dividers that are added later, I cut two ⅜"-wide dadoes ¼"-deep in each side piece, see Fig. 1 and detail 'a' at right. I wanted to make sure the dadoes on the pieces aligned, so I cut the dadoes while using a stop block attached to an auxiliary miter gauge fence.

Shop Tip: Keep the bottom edge of each piece against the fence. This way if there's any chipout, it'll be cleaned up when the rabbet is cut.

CUT RABBET. For the bottom of the case, I used a piece of ¼"-thick plywood, see drawing above right. It simply fits into a ¼" rabbet cut on the bottom of the case pieces, see Figs. 2 and 2a. And to cut the rabbets, I used an auxiliary fence, burying the dado blade in the fence.

TAPER PIECES. The next step is to taper the sides of the case. To do this, start by drawing the taper on one of the pieces, see detail 'a' above. Then to make sure the sides are identical, you can carpet tape them together. (The dadoes should face each other.) I cut the taper on the band saw and planed down to the layout line, see Fig. 3.

Now the top edges of the front and back pieces can be beveled to match the taper of the sides. To get an exact match, I dry assembled the pieces and marked the final height from the sides, see Fig. 4. Then I trimmed the pieces on the table saw, see Fig. 5.

Shop Tip: When tilting the blade for cutting the bevel on the front and back pieces, I didn't rely on the mark-

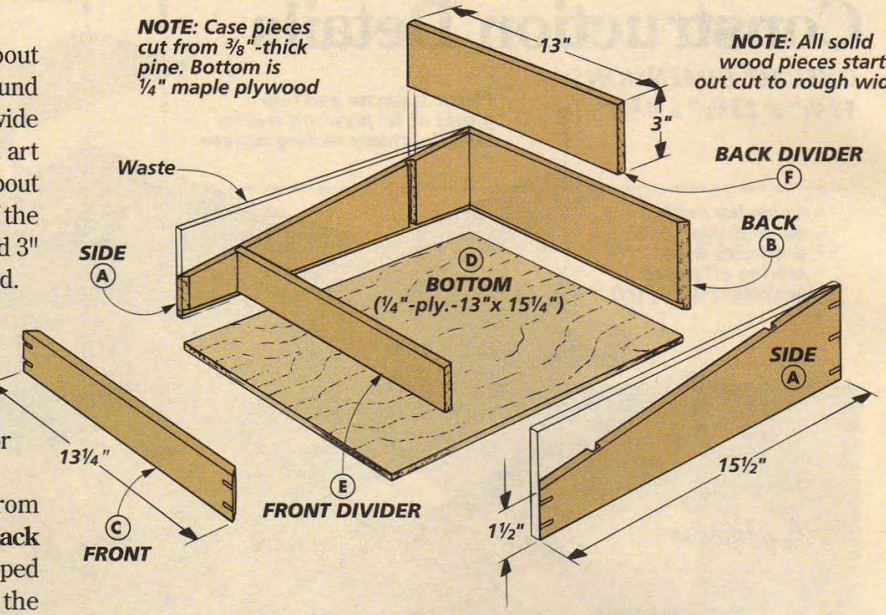

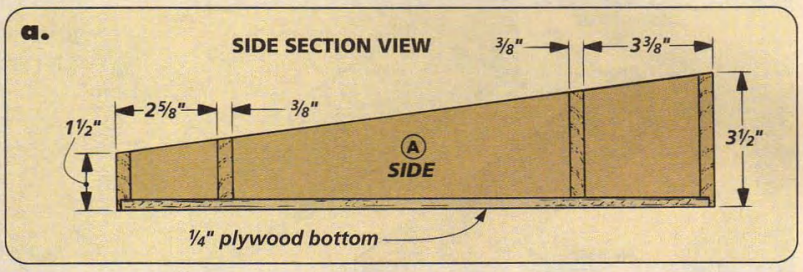

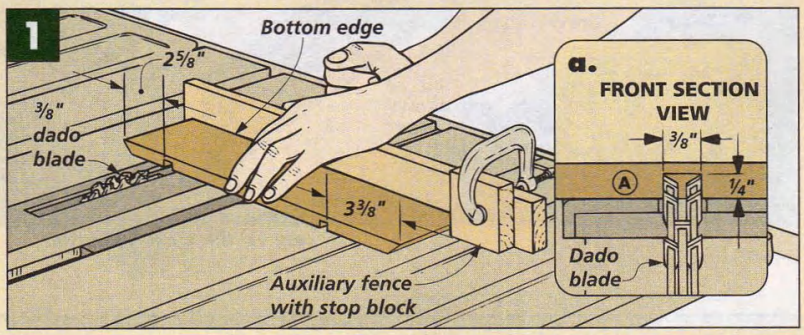

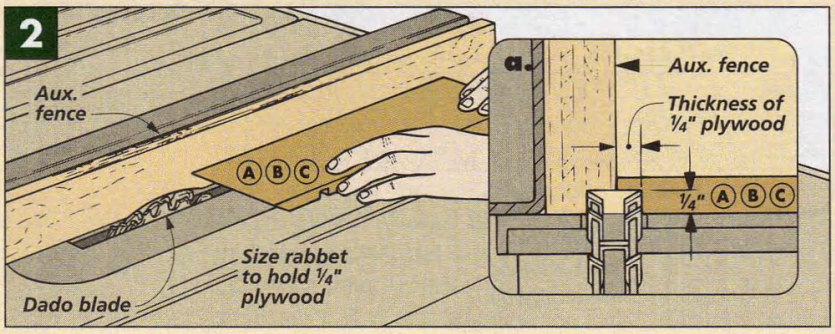

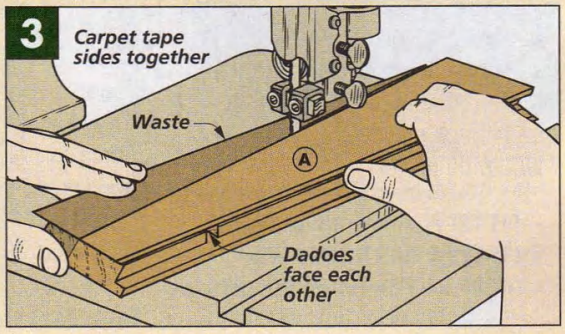

ings on the saw. Instead, I used one of the side pieces to set the angle, see drawing in margin at right.

CASE BOTTOM. After the top edges of the front and back pieces have been beveled, I dry assembled the case and cut a piece of ¼"-thick plywood to fit in the rabbeted opening, see drawing on page 26 and Fig. 6. (My bottom panel ended up 13" x 15¼".)

ASSEMBLE CASE. Now the case can be glued together. I used band clamps for this, and to make things easier, I assembled the case in two steps. I glued the four case pieces first, using the bottom panel simply to keep the assembly square. Then after the glue was dry, I glued the bottom panel into the rabbets, see Fig. 6.

DIVIDERS. The only case pieces left to add now are the **front** and **back dividers (E & F)**. These ⅜"-thick pieces are cut to fit between the dadoes you cut earlier in the sides, see Fig. 6. (Mine were 13" long.)

Like the front and back of the case, the dividers start out oversize in width (height) and then are trimmed to match the sides. Again, I marked the height from the side pieces, see Fig. 6a. Then I tilted the blade and trimmed the top edge, sneaking up on the final height.

DECORATIVE SPLINES. With the dividers glued in place, next I reinforced the miters in each corner by adding decorative cross splines. (For more on this procedure, see page 30.) To do this, first kerfs are cut across the corners with the case held in a simple cradle, see Fig. 7. When laying out these kerfs, note that the position of the bottom kerf on the front and back corners are the same. But the others are different, see Figs. 7a and 7b.

With the kerfs cut, I glued a spline in each. (I used pine.) Again for more on this, see the article on page 30.

SAND TOP EDGES. Before working on the lid, check the top edges of the case. They should be flush, but if they're not, that's okay. There's a quick way to get them flush. Lay down some adhesive-backed sandpaper on a flat surface — like a table saw. Then sand the top edges until they're flush, see photo below.

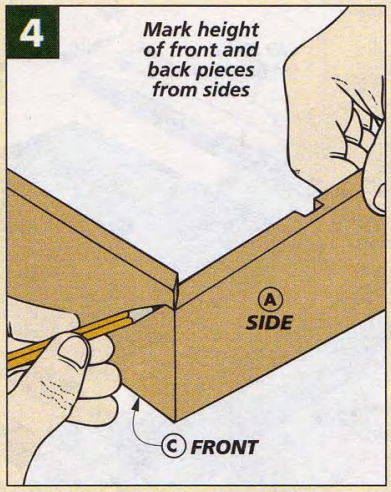

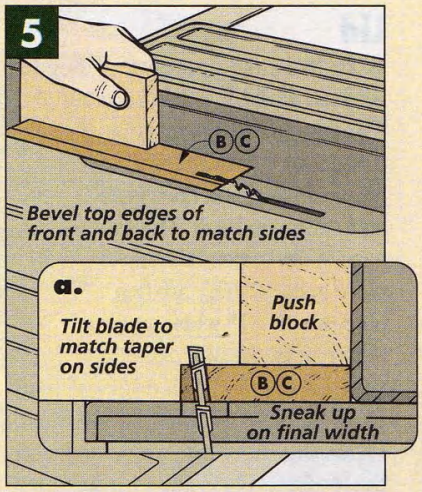

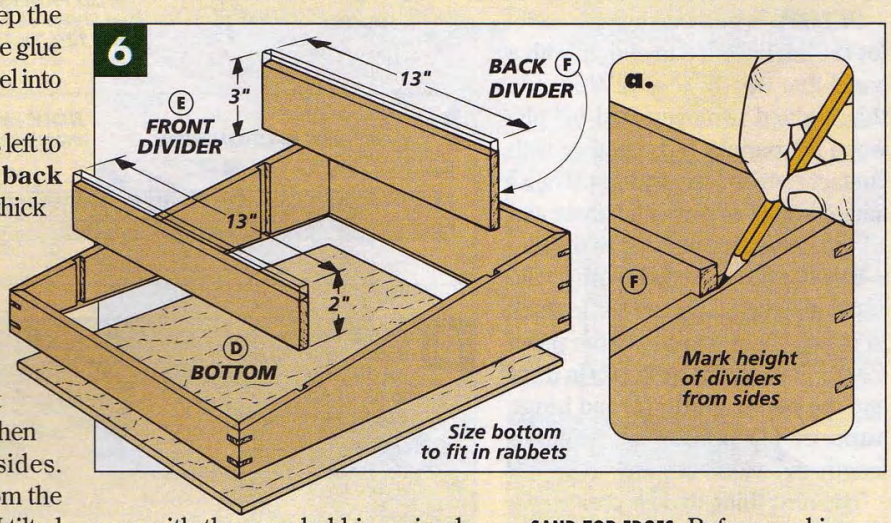

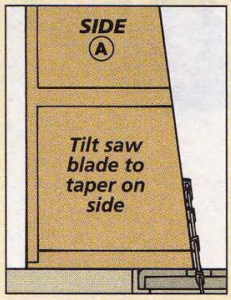

▲ *When trimming the front and back pieces to match the taper on the sides, you can quickly tilt the blade to the proper angle by using a side piece as a guide.*

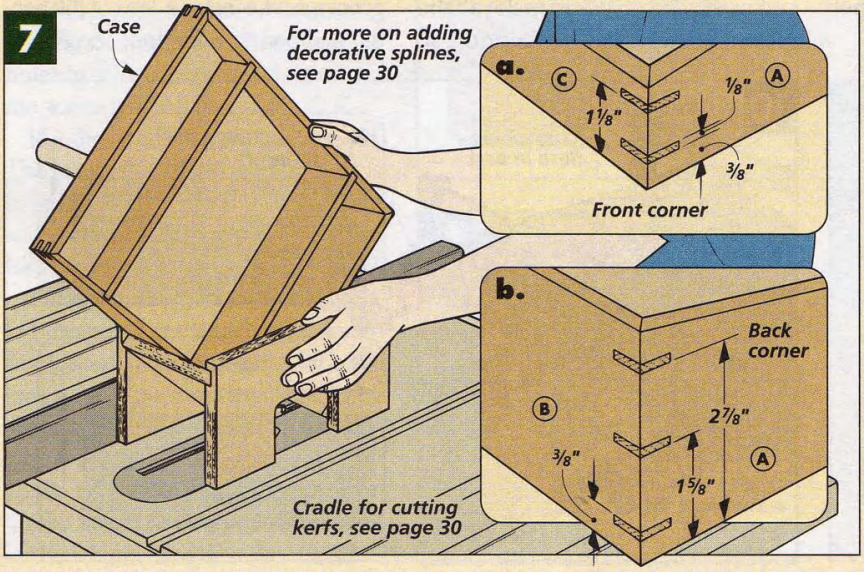

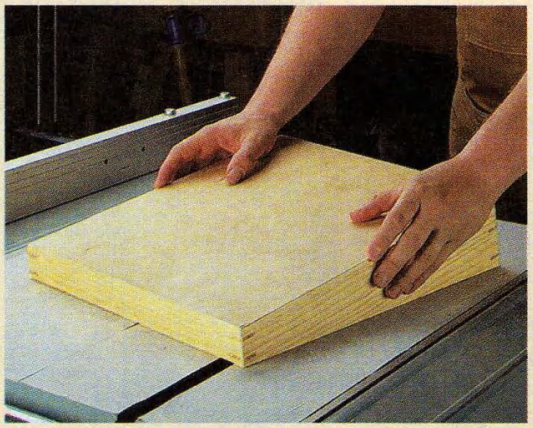

▲ *If the top edges of the case aren't flush, apply several strips of adhesive-backed sandpaper to a flat surface. Then sand the edges smooth, moving the case in a circular motion.*

Lid

With the case complete, I began work on the lid, see drawing at right. The unusual thing here is that the paper feeds through the lid. To do this, first I designed an opening in back. This is easy to do. Instead of one piece in back, there are two pieces with a 1"-wide opening between them, see detail 'b.'

Then for the lid's edges, I used stock that was thicker than the panel. When the paper cover is added later, this creates a tiny gap for the paper.

LID PANEL. When making the panel for the lid, I needed to end up with a panel that was 12⅞" x 12½". To do this, I glued two oversized ¼" plywood **lid panels (G)** together with contact cement, see drawing. Then I added a layer of plastic laminate and trimmed the assembly to final size.

HANDLE, GUIDE & SUPPORT. With the lid panel glued up, I planed some stock to match the thickness of the panel (7/16"). Then the **handle (H)** in front and the **paper guide (I)** and **hinge support (J)** in back can be cut to length and width, see drawing.

The next thing to do is create centered, ¼"-thick tongues on each lid piece, see Fig. 8. The panel gets a tongue on all four edges, see drawing. The handle, guide and support have tongues cut only on their ends.

LID EDGES. To hold all these lid pieces together, I made two **lid edges (K)**. Again, these pieces are cut from stock that's 1/16" thicker than the panel so there's room to feed the paper through later, see detail 'a' above.

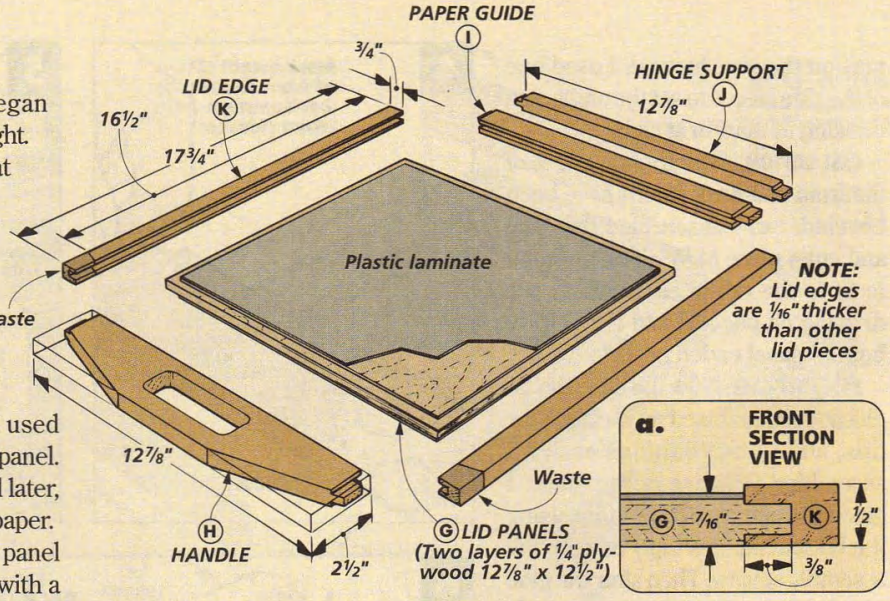

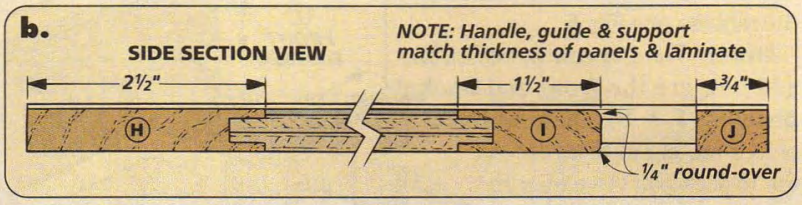

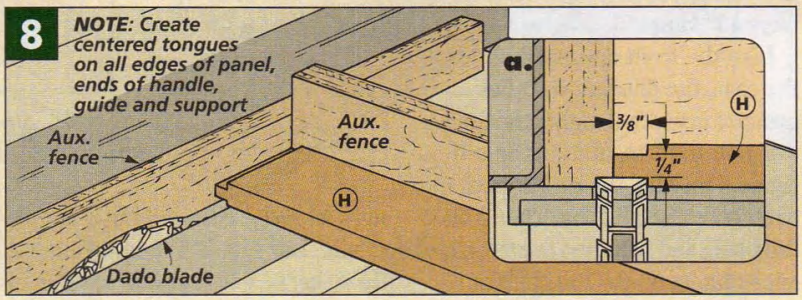

After the lid edges are cut to size, I cut grooves in their inside edges for holding the other lid pieces, see Fig. 9. Since the edges are thicker than the other pieces, the grooves aren't centered. The goal is to make all the pieces flush along the bottom, so when cutting the grooves, keep the bottom face of the pieces against the fence, see Fig. 9a.

While you're cutting the groove on the lid edges, you can cut this same groove on the inside edges of the handle and paper guide too, see Fig. 9.

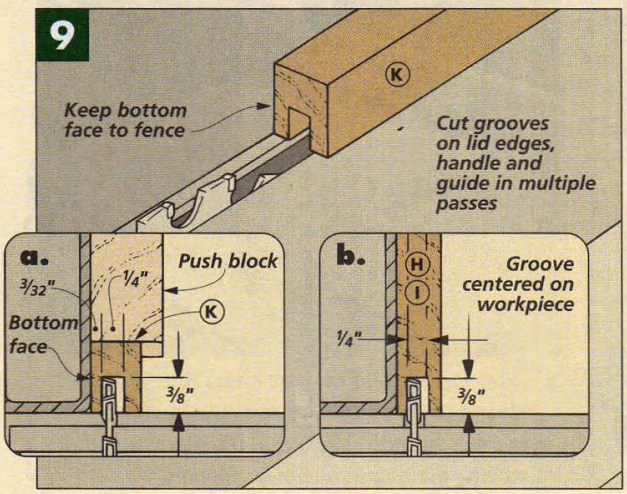

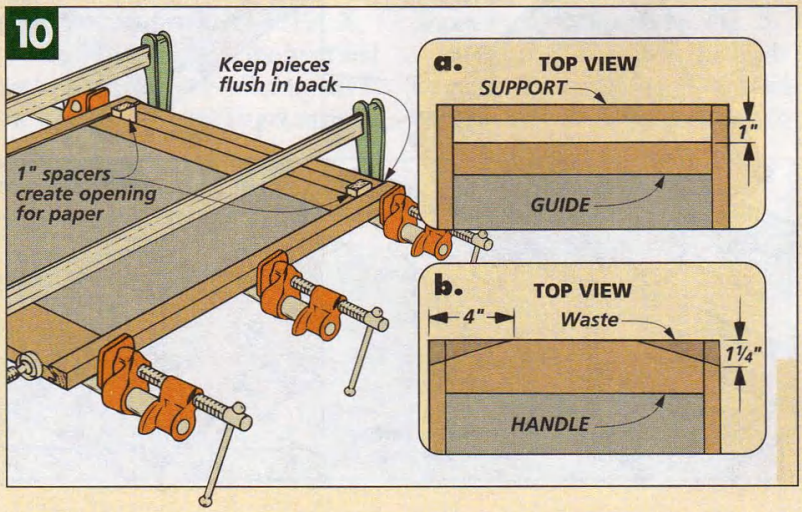

This allows these pieces to fit tight against the lid panel, see drawing and detail 'b' on page 28.

Before gluing the lid together, I did something to make feeding the paper through a little easier. I routed a 1/4" roundover on the outside edges of the paper guide (I), see detail 'b' in the drawing on page 28.

LID ASSEMBLY. Now all the pieces of the lid can be glued together, see Fig. 10. The hinge support (J) and lid edges (K) should be flush in back, and there should be a 1"-wide space between the paper guide (I) and the hinge support, see Fig. 10a.

In front, the handle should be flush with the ends of the edge pieces, but this isn't critical. After the glue dries, the front edge can be cut to shape, see Fig. 10b. (But don't cut the handle opening quite yet.)

PAPER COVER & GUIDE BAR. Next, to cover the paper opening in back, I added a 3/16"-thick **paper cover (L)**, see drawing above right. At the same time, I added a **guide bar (M)** to the front to hold the paper in place. Both pieces are cut 1/4" shorter than the width of the lid and simply screwed in place, see details 'a' and 'b' above.

PIANO HINGE. Now the lid can be attached to the case. To do this, I used a piano hinge, routing the mortise in the case only, see drawing and detail 'c' above. (You can read more about how this was done on page 15.)

HANDLE OPENING. Now that the lid is attached, the handle opening can be created. I laid out the opening so it was flush with the front of the case, see Figs. 11 and 11a. Then I drilled holes in the corners and cleaned out the waste with a sabre saw.

But the handle isn't quite done yet. The back edge of the opening needs to be beveled to match the case front so you can add the catch. I did this with a rasp and sandpaper, see Fig. 12.

Finally before attaching the catch, I softened all the sharp edges with sandpaper. To prevent scratching the laminate, I applied masking tape around its edges. (Leave the tape on when applying the finish too.) I applied a couple coats of a wipe-on finish. Then I screwed the draw catch to the lid and case, see Fig. 13.

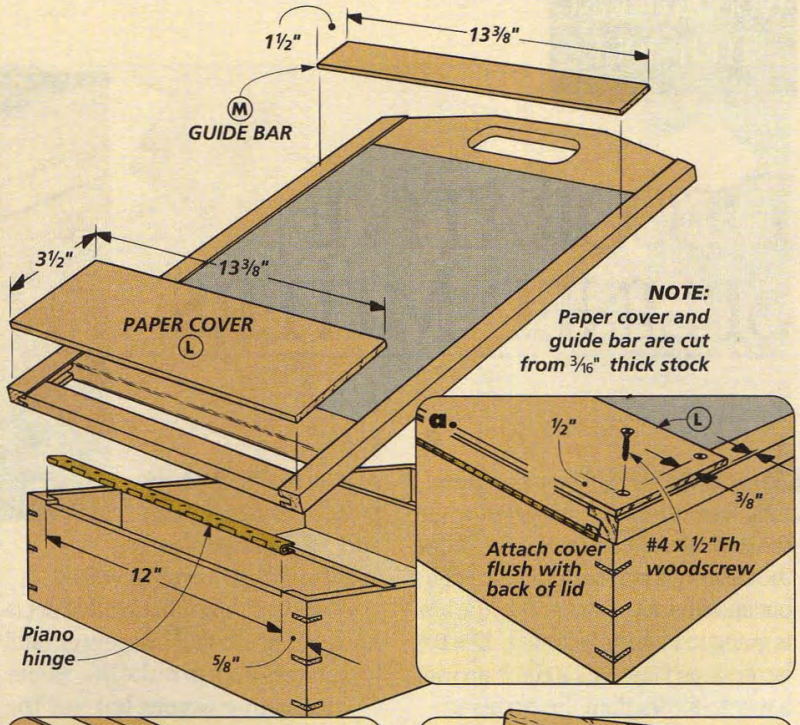

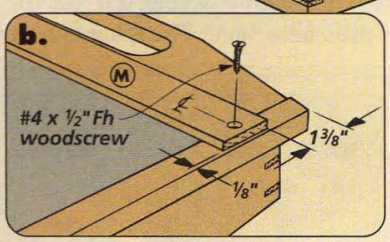

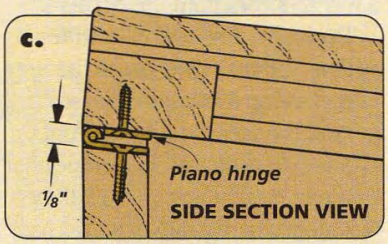

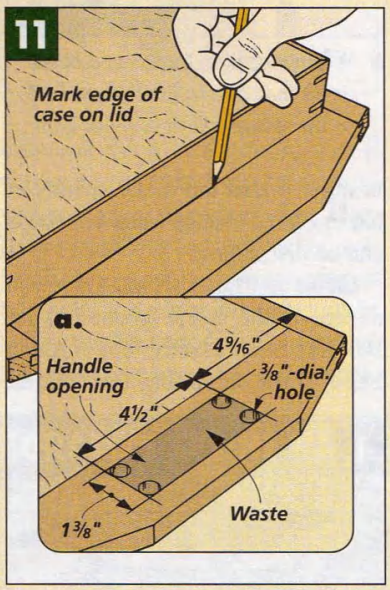

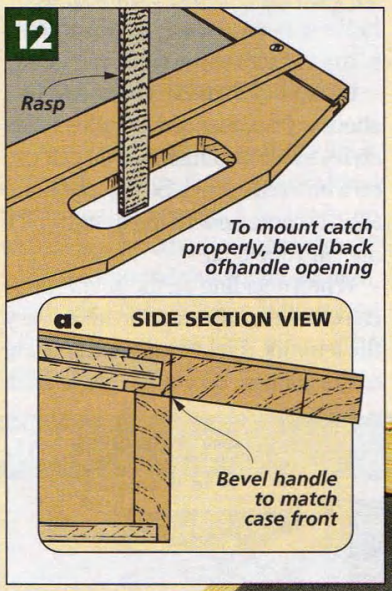

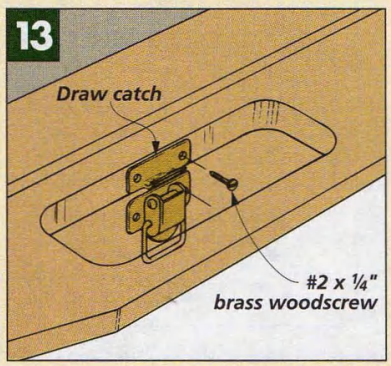

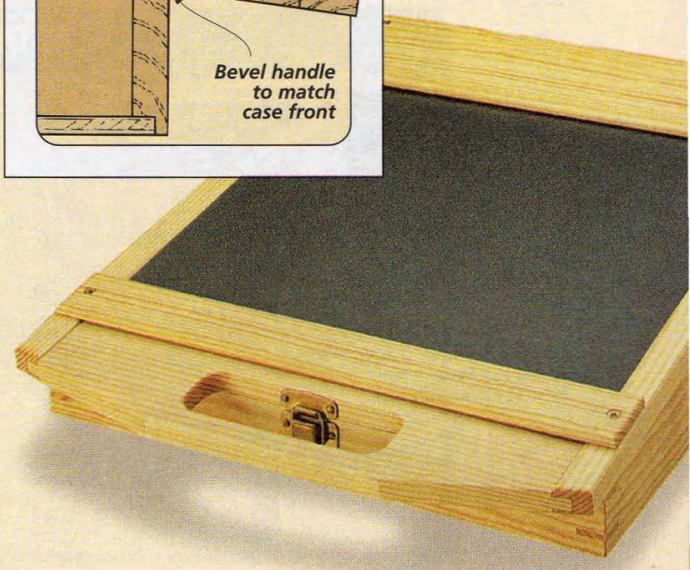

DECORATIVE SPLINED MITERS

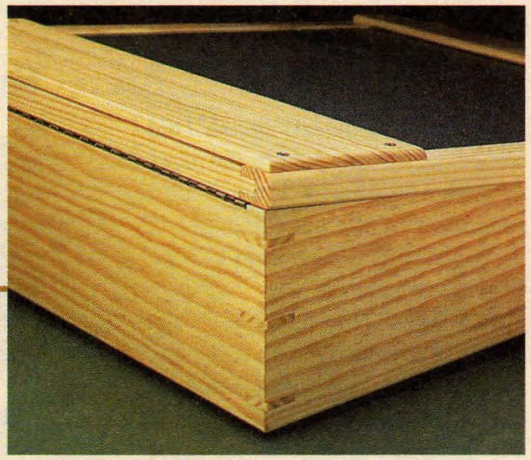

Anytime I join a box with miters, I have to decide whether or not the joint should be reinforced. I like the clean look of miters, but they don't put up with a lot of abuse. So if the box is going to be handled much, like the lap desk on page 24, I'll come up with a way to strengthen the corners.

Typically, I reinforce a miter by adding splines. They cross the joint line, creating a lot more glue surface to hold the pieces together. And the splines can either be hidden or exposed depending on how they're oriented. For the lap desk on page 24, I decided to use exposed, decorative splines, adding subtle accents to the corners of the desk, see photo.

LAYING OUT SPLINES. There are just about any number of decorative spline styles and combinations you can use on a mitered corner. So the first thing to do is come up with the design you'll use on your box.

When deciding on the splines, you can choose contrasting woods or vary the lengths, thicknesses and spacing of the splines. (For some variations, see the box on the next page.) You can even add dovetail-shaped splines, called "keyed dovetails".

When deciding what kind of decorative splines to add to a corner (and how many), I try to make the splines an interesting accent but *not* the "main attraction." The thing to keep in mind is that too many splines or too much contrast between the woods can be distracting.

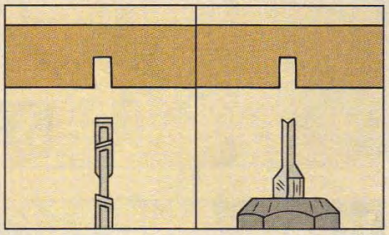

▲ *When cutting a kerf, use a blade or bit that cuts a flat-bottom kerf so the spline will fit without gaps.*

ADDING DECORATIVE SPLINES. Once you decide on the spline layout and the box has been assembled, you can begin work on adding the splines. The process is pretty simple. First, kerfs are cut across the corners of the box. Then thin strips of wood (the splines) are cut to fit snug in the kerfs.

CRADLE. The trickiest part of this procedure is creating the kerfs in the corners of the box. To cut across the joints, the box has to be held at a 45° angle to the table. So to do this safely, I used a simple cradle, refer to Fig. 3. (Note: This cradle works on a router table as well as a table saw, see the margin photo at right.)

To build the cradle, start with two side pieces cut from ¾"-thick plywood. Then cut two ¼"-deep dadoes at 45°, see Fig. 1. These hold two support pieces that form a 90° corner. But before screwing the support pieces between the sides, I cut a small "window" on one of the side pieces, see Fig. 2. This makes it much easier to set the height of the blade (or bit) and to position the fence.

CUTTING KERFS. When the cradle has

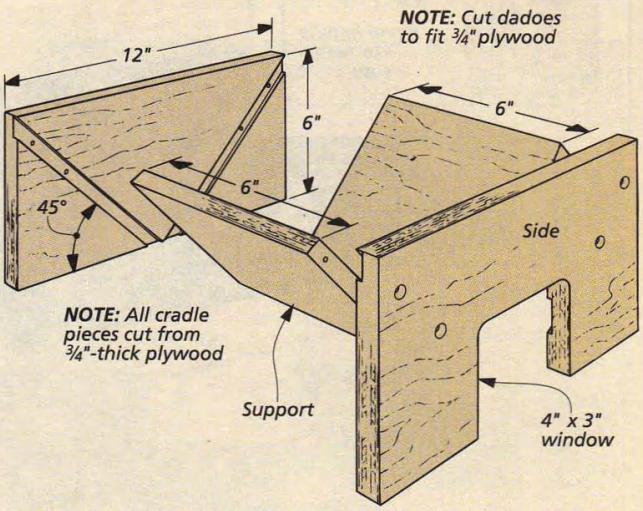

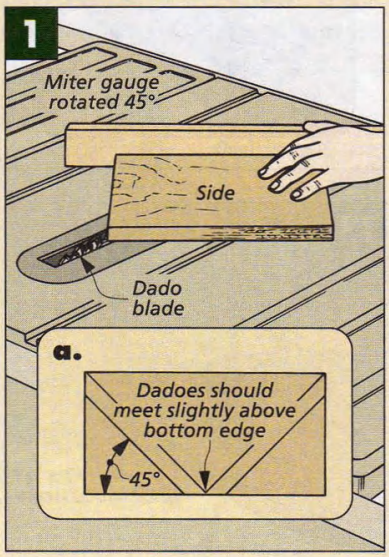

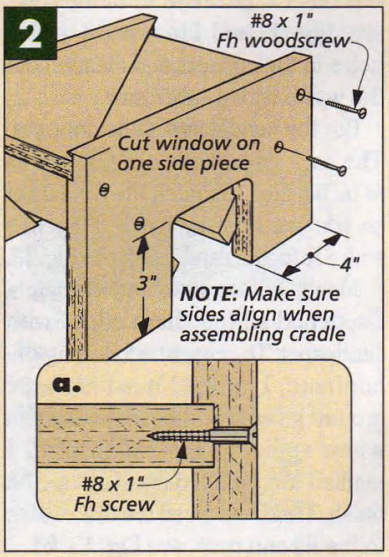

been screwed together, you're ready to cut the kerfs for the splines, see Fig. 3. What you want is the deepest kerf you can cut without cutting through the inside corner of the box. So to set the height of the blade (or bit), I set the box in the cradle and position it next to the blade, see Fig. 3a. Then I raise the blade until it's about 1/16" below the inside corner.

With the height of the blade set, I remove the box and position the fence. Here, the "window" in the cradle comes in handy. I simply slide a ruler into the window against the inside face of the cradle and measure over to the blade (or bit), see Fig. 3b.

Cutting the kerfs is just a matter of pushing the cradle over the blade. The important thing is to make sure the box stays tight against the inside face of the cradle.

CUTTING THE SPLINES. With the kerfs cut, the splines can be cut to fit. To do this, you can cut the thin strips on either the table saw or band saw and then sand them to fit, if needed.

Shop Note: If you use a dovetail bit to create the kerfs, you'll need to use this same bit to make a special "key" that fits the opening. (For more on this process, see *Woodsmith* No. 105.)

No matter how you make these splines, the important thing is the fit. They should slide into the kerfs easily, but there shouldn't be any gaps. Place the spline in the kerf and mark its position. Then cut it to rough size with a hand saw, see Fig. 4.

When gluing in the splines, there's only one thing to watch out for. If you're not careful, you can end up with a tiny gap along one edge. They have a tendency to "rock" when you tap them in place — when tapping in one side, the other side often pulls away from the kerf. And you can't see this easily because of the excess glue.

After the glue dries, all that's left is to trim the splines flush. I used a hand saw to do this, see Fig. 4. But to avoid scratching the box, I left a little "stub" and then sanded the spline smooth, using adhesive-backed sandpaper on a flat surface to keep the sides of the box flat, see Fig. 5.

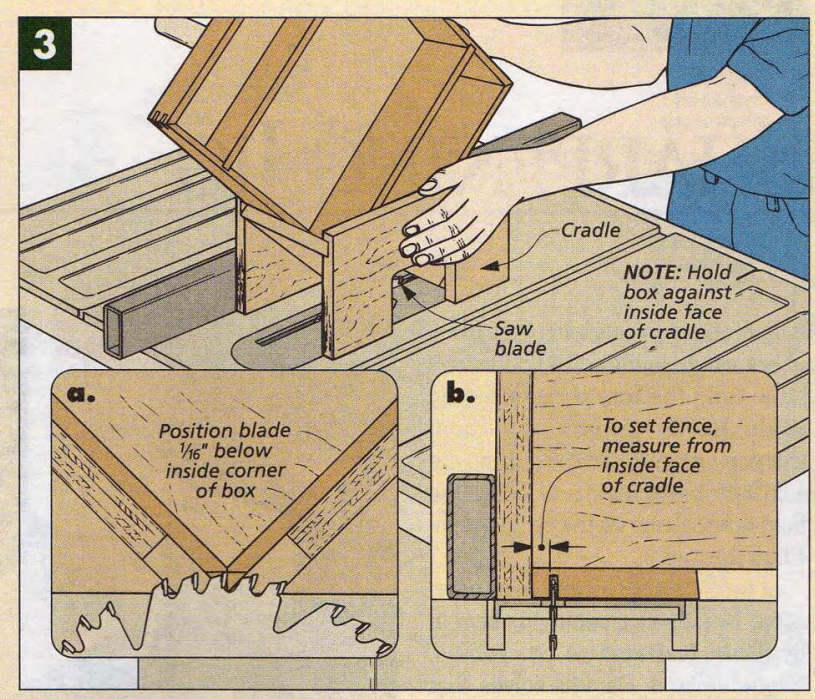

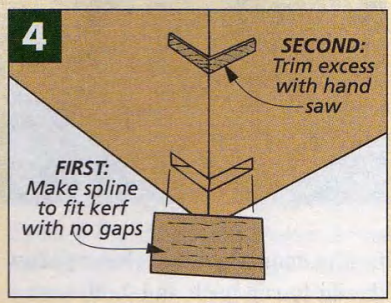

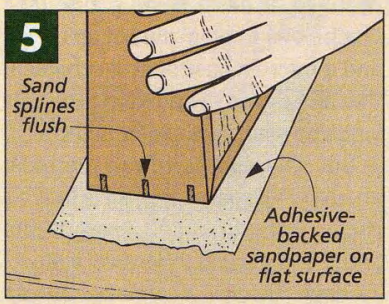

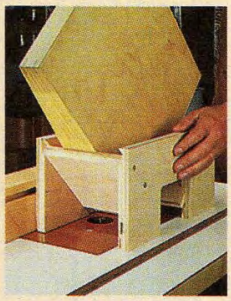

▲ *The shop-made cradle used for cutting kerfs works just as well on the router table.*

DECORATIVE SPLINE VARIATIONS

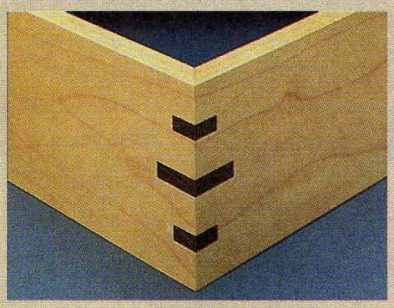

***Varying Lengths**. The kerfs for these walnut splines were routed in a maple box. To rout the shorter kerfs, I simply lowered the 1/4" straight bit.*

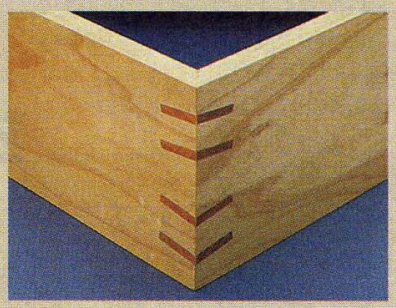

***Angled**. To cut the kerfs for these cherry splines, I tilted the blade 7°. And I made two passes with each setting, flipping the box between passes.*

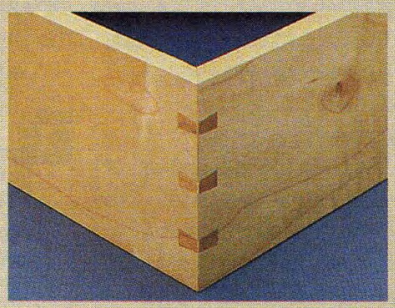

***Keyed Dovetails**. These aren't true dovetails. The kerfs are routed with a dovetail bit after the box is assembled. Then a maple "key" is added.*

SHARPENING JIG

Sharpening chisels and plane irons is a whole lot easier if you have a jig to hold the tool at a consistent angle. But the trouble with most sharpening jigs is that the only way to adjust the bevel angle is to loosen the hold-down clamp on the jig and reposition the tool.

At best, this is a hit and miss operation. But the sharpening jig sent in by **Bob Kelland** of St. John's, Newfoundland, Canada solves that problem. It has a bevel gauge (see box below) to help you set up the jig and a micro-adjustment mechanism that allows you to fine-tune the angle while the tool is clamped in the jig.

But what intrigued me the most about Bob's sharpening jig is that it's made almost entirely from items found at your local hardware store. A simple T-hinge, a carriage bolt and threaded insert, and some nuts and bolts are about all the hardware you'll need. A pair of replacement rollers for the door of a tub enclosure allow the jig to roll back and forth over a sheet of silicon-carbide sandpaper (or a sharpening stone), see photo. (Replacement rollers are also sold at most home centers.)

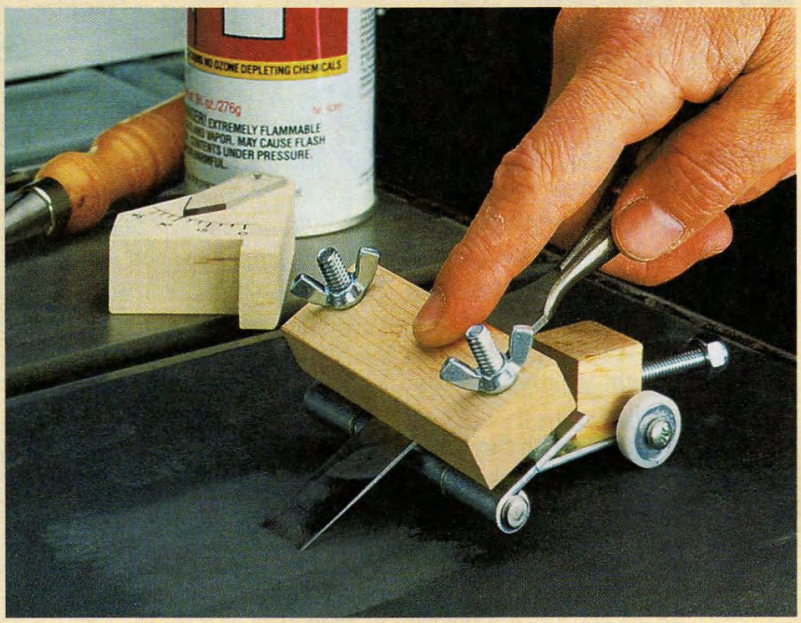

HINGE AND ROLLERS. The main body of the sharpening jig is nothing more than a $3\frac{1}{2}$" T-hinge. Start by cutting about an inch off the long end of the

BEVEL GAUGE

One of the problems with most sharpening jigs is that there's no way to tell at what angle you're sharpening the bevel on a tool. But this sharpening jig includes a bevel gauge that does just that. The gauge is nothing more than a block of wood that sits on top of the jig. As you adjust the jig up or down, a pointer on the gauge tells you the angle.

To make the bevel gauge, start with a small block of wood cut from a piece of $\frac{3}{4}$"-thick stock. A notch is cut on the bottom of the block to allow the gauge to rest on the jig, and the upper corner is cut off to make the gauge less top-heavy, see photo and Fig. 1. The index pointer is made from a piece of $\frac{1}{8}$"-thick Plexiglas and is fastened to the gauge with a small nail so that it can swing freely.

To lay out the index markings on the gauge, place the gauge on a square test block of wood sitting on a level surface. Make a mark on the gauge where the index is pointing to indicate the 0° point. To mark out the other settings, just miter the end of the test block, first at 5°, then 10°, on up to 45°, see Fig. 2.

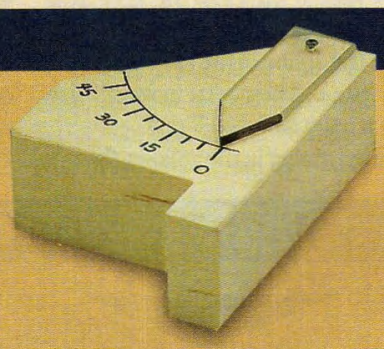

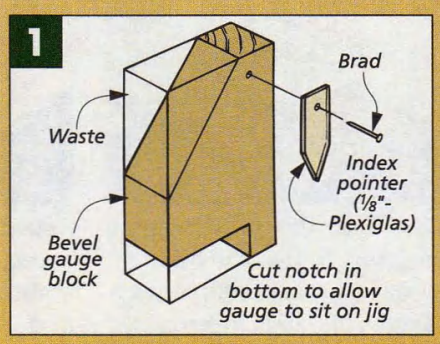

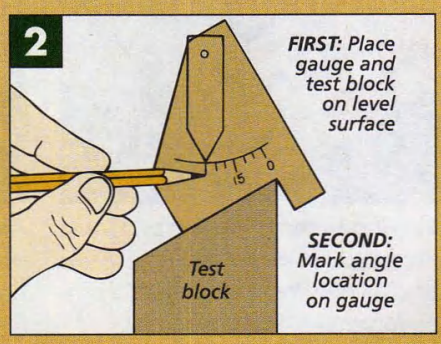

hinge. Now the micro-adjust mechanism can be added.

The micro-adjust starts off as a hardwood block with a hole drilled through the center for the adjusting mechanism and a kerf cut on the bottom for the rollers, see drawing and detail 'a' at right. The adjustment mechanism is just a simple carriage bolt with a nylon lock nut threaded on one end.

After inserting the threaded insert and carriage bolt, the block can be epoxied to the end of the hinge. (Make sure to add the carriage bolt *before* epoxying the block to the hinge.) Then a lock nut is threaded onto the end of the carriage bolt to serve as a knob. Now the rollers can be added.

ROLLERS. The rollers for the jig fit onto an "axle" that is made up of an ordinary machine screw. Just thread one roller on the screw. Then insert it into the kerf in the block and add the second roller.

HOLD-DOWN CLAMP. The other end of the hinge contains the hold-down assembly. Like the micro-adjust assembly, this also starts out as a hardwood block, cut to the same width and length as the leaf of the hinge. The hold-down is drilled and counterbored to fit over two 1/4" machine screws and lock nuts, see drawing and detail 'b'. A pair of wing nuts hold the block in place.

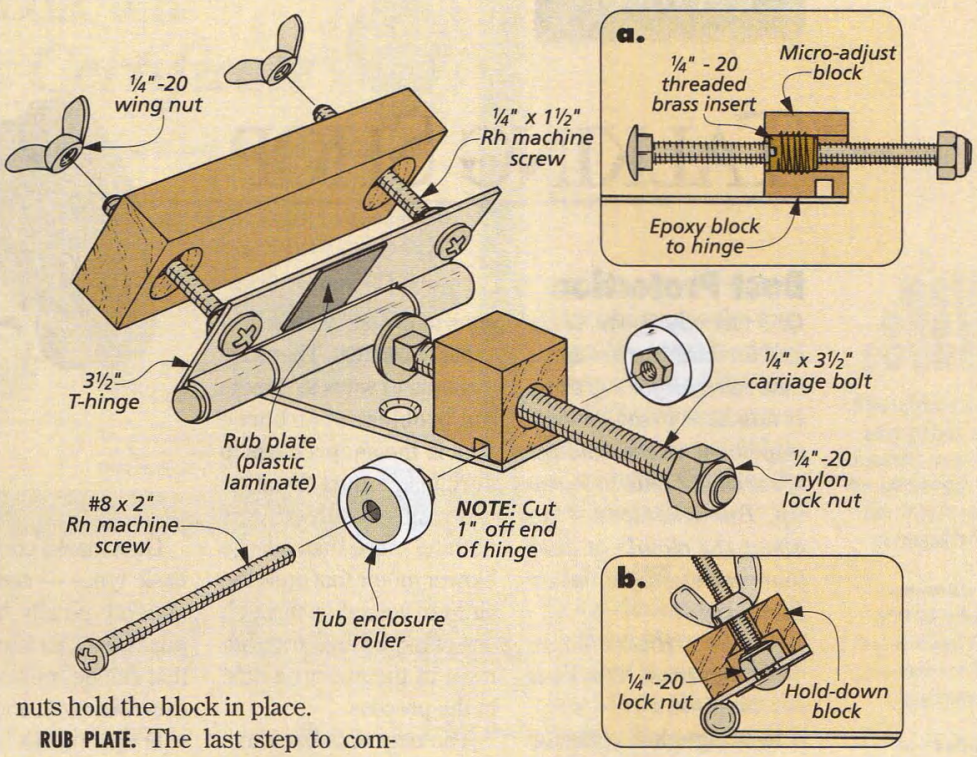

RUB PLATE. The last step to complete the jig is to attach a rub plate to the underside of the hinge. This plate is just a piece of plastic laminate that's epoxied to the hinge, see drawing. It covers the center screw-hole of the hinge and makes it easier to turn the carriage bolt to adjust the angle of the jig.

With the jig completed, you can make the bevel gauge, see box on opposite page. Then you're all ready to set up and use the jig, see below.

FEATURE YOUR JIG

If you've built an original woodworking jig and would like to see it featured on this page, send your idea to *Woodsmith*, Reader's Jig, 2200 Grand Avenue, Des Moines, IA 50312.

If we publish your jig, we will send you $100 and a full set of *Woodsmith* back issues, with binders. Include a sketch (or photo), explain how it's used, and please include a daytime phone number.

Using the Jig

Using the sharpening jig is a two-step process. First, place your plane iron or chisel underneath the hold-down clamp so that about an inch to an inch and a half of the blade is projecting, see Fig. 1. Then tighten down the wing nuts to secure the clamp.

Next, place the bevel gauge on the hold-down block and turn the carriage bolt until the indicator on the gauge is pointing to the angle that you desire. (I generally sharpen my chisels and plane blades at a 30° bevel.) With the sharpening jig adjusted to the correct angle, you can remove the bevel gauge and start sharpening.

Once you have an even bevel across the entire cutting edge of the tool, you can create a "micro-bevel" at the very end of the blade. To do this, simply give the carriage bolt an additional turn to raise the angle slightly, see Fig. 2. Then take a couple more passes over your sandpaper or sharpening stone until you have a consistent micro-bevel, see Fig. 2a.

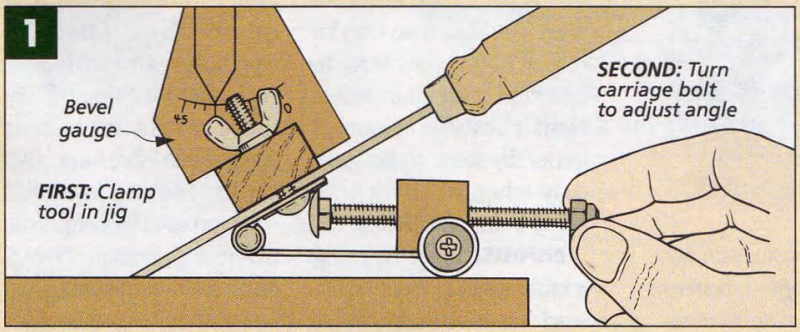

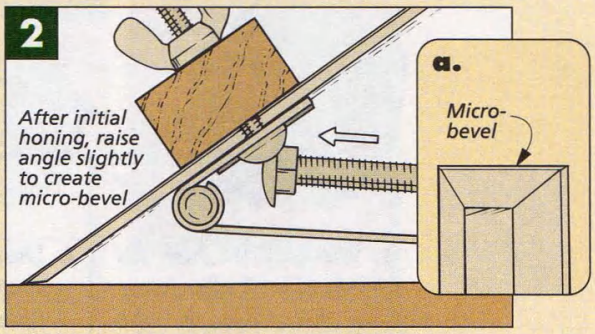

TALKING SHOP

Dust Protection

Q. I recently broke down and invested in a two-stage dust collector for my shop. It has been great for cutting down on the amount of sawdust I have to sweep up. But what can I do about the clouds of dust that continue to fill the air in my shop?

Bryon Moore
Queens, New York

A two-stage dust collector is a good first step at controlling most of the heavy sawdust produced by a saw or router. But as you've already discovered, a dust collector alone will not remove all the fine particles of *airborne* dust in your shop. And this is something that shouldn't be overlooked.

A shop filled with dust is more than just an annoyance. Breathing in wood dust can create some long-term health risks to your lungs and respiratory system. On top of this, certain types of wood dust (like walnut) can cause an allergic reaction in some people. These are all good reasons to protect yourself.

DUST FILTRATION. There are a couple of ways to handle the problem of airborne dust in the shop. One is to purchase a dust filtration unit. Essentially, this is nothing more than a large blower motor that pulls the air from your shop through one or more filters, trapping most of the airborne dust in the process.

The only drawback to a dust filtration unit is the cost. Commercial units start at about $260. For about half this amount, you can make your own dust filter (see *Woodsmith* No. 95 for plans). But fortunately, there is also a less expensive, low-tech alternative.

DUST MASKS. One of the easiest and best ways to protect yourself from the effects of airborne dust is to wear a respirator or dust mask, see photos. In fact, a respirator or dust mask is a good idea even if you do have a dust filter, since a certain amount of dust will find its way to your lungs before it makes it to the dust filtration unit.

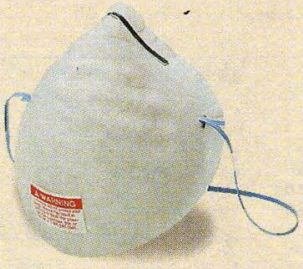

▲ *With only one strap, this type of mask allows dust to enter around the edges.*

▲ *Dust masks with two straps offer a better fit for more protection.*

Dust masks come in two basic types — respirators, which typically have disposable filter cartridges that can be replaced when they wear out, and disposable dust masks made out of paper. We use both types in the *Woodsmith* shop.

RESPIRATORS. Respirators (see photo above) typically offer better protection because they have a soft rubber mask held in place with adjustable, elastic straps. This allows the mask to fit tightly over your mouth and nose, preventing dust from entering. Most also have an exhale valve to make breathing a little easier.

An added benefit of a respirator is that you can purchase special filter cartridges that will also protect you from the mist created while spraying paint or a finish on a project.

The downside to using respirators is they can be hot and cumbersome to wear. And because they're rather bulky, they tend to interfere with your line of sight. For these reasons, I generally wear respirators only when working with spray paint or finishes.

DISPOSABLES. When using a table saw or other woodworking tool that creates a lot of dust, I prefer to wear a disposable dust mask. These are paper masks with elastic straps. They're lighter and more comfortable to wear. And although they don't protect you against fumes or vapors, they allow you to breathe a lot easier while still keeping out dust.

There are several paper masks on the market. Some of them are lightweight with a single strap, see left photo below. The problem I've found with these masks is they tend to leak air around the edges, allowing dust to enter.

So instead, I look for a mask like the one on the right. In addition to a flexible strip of metal around the nose, it has *two* elastic bands to help ensure a tight fit. And you can get these masks with or without exhale valves. Although this type of dust mask costs a little more (about $15 for a box of twenty without exhale valves), I think it's worth the extra cost.

One more thing. While these masks are sold as "disposable," I've found that you can use the same mask over and over for some time before they actually "wear" out. So a box of twenty can last you quite a while. W

SOURCES

Woodsmith Project Supplies is offering hardware kits and shop drawings for some of the projects featured in this issue. Similar supplies for these projects are also available at local woodworking stores or the mail order sources listed at right.

TOOL CART

To build the roll-around tool cart on page 6, you'll need quite a few materials. We found the maple MDF-core "plywood" at a local lumberyard, but you can use traditional plywood too. If you do use MDF, remember that it's best to use sheet metal screws.

As for the aluminum angle, we found it in eight-foot lengths at a local hardware store. This works out pretty well for the 1½" angle used to make the drawer pulls. But there is some waste with the 2" angle for the corners. So we decided to create a hardware kit that includes the aluminum.

Woodsmith Project Supplies is currently offering a kit that includes everything you need *except* the drawer slides and casters, see below.

• Tool Cart Hardware Kit
7118-100 ..... $84.95

DRAWER SLIDES. When choosing the drawer slides, we wanted heavy-duty, full-extension slides, see the sources at right. The ones we chose are 18"-long *Accuride* slides. You'll need to order five pair for the tool cart.

CASTERS. The only other hardware you'll need for the cart are the 4"-dia. casters. Locking casters can be found locally, but they will shift even when the wheel is locked. So for this cart, we used "double-locking" casters. In addition to locking the wheel, the brake also locks the base of the caster so it won't swivel. This way, it can't move or shift when locked. These 4"-dia. casters are available from the sources listed at right.

METAL COUNTERSINK BITS

When countersinking the screw holes in the tool cart, we used a countersink designed for metal. It has a single cutting edge that reduces chatter and creates a smooth cut. And instead of chips, it produces a thin, curly shaving. *Weldon* is one manufacturer of these bits, and they're readily available from the sources at right.

STORAGE PEDESTAL

To build the storage pedestal on page 16, all you need is a few pieces of hardware. Besides some woodscrews and a couple washers, you'll need a short piece of ⅛"-dia. steel rod, a 5/16"-dia. magnetic catch and shelf pins, all of which we found locally.

MARBLE TILE. Of course, the striking thing about the pedestal is the marble tile in the top. We special ordered our 8"-square piece from a local flooring shop. Marble tile will vary in size, so it's a good idea to have your tile in hand before you begin building the frame on top of the pedestal.

LAP DESK

To build the lap desk on page 24, you'll need a small piece of plastic laminate. However, if you can't purchase a piece at a local store, you can try a cabinet shop. They might have a cutoff they'd be willing to sell.

The hardware items needed for the desk are a small piano hinge, draw catch, and woodscrews. Items similar to the ones we used are available from the sources at right.

SHOP DRAWINGS

Like last issue, we are currently offering the shop drawings we used to build the projects featured in *Woodsmith*. These shop drawings are large, "blueprint-style" scale drawings printed on 18" x 22" sheets. The following are currently available:

• Tool Cart Shop Drawings
7118-150 ..... $8.95
• Pedestal Shop Drawings
7118-200 ..... $8.95

MAIL ORDER SOURCES

Similar project supplies and hardware may be ordered from the following companies:

Constantine's
800-223-8087
Drawer slides, Casters, Lap desk hardware, Respirators

Lee Valley
800-871-8158
Drawer slides, Casters, Countersink, Lap desk hardware, Respirators & Dust masks

Woodcraft
800-225-1153
Drawer slides, Casters, Countersink, Lap desk hardware, Respirators

Woodworkers' Store
800-279-4441
Drawer slides, Lap desk hardware

Woodworker's Supply
800-645-9292
Drawer slides, Countersink, Lap desk hardware, Respirators & Dust masks

WOODSMITH PROJECT SUPPLIES

To order hardware kits or shop drawings from *Woodsmith Project Supplies*, please use our Toll Free order line, see below. It's open Monday through Friday, from 8 AM to 5 PM Central Time. Before calling, please have your VISA, MasterCard, or Discover Card ready.

If you would like to mail in your order, call the number below for more information concerning shipping charges as well as any applicable sales tax.

1-800-444-7527
When ordering, please use Key W118

Note: Prices subject to change after October 1998

WoodNet™ NOW ON THE WEB!

- Over 100 Woodworking Tips Online
- Project Plans You Can Download
- Forums for Woodworking, Tools & Classifieds
- Catalog of Project Kits, Tools & Jigs
- Power Tool Reviews
- Links to Other Woodworking Sites
- *Woodsmith/ShopNotes* Back Issue Index

Point your browser to:
http://www.woodsmith.com
Then select the "WoodNet" option from the menu.

FINAL DETAILS

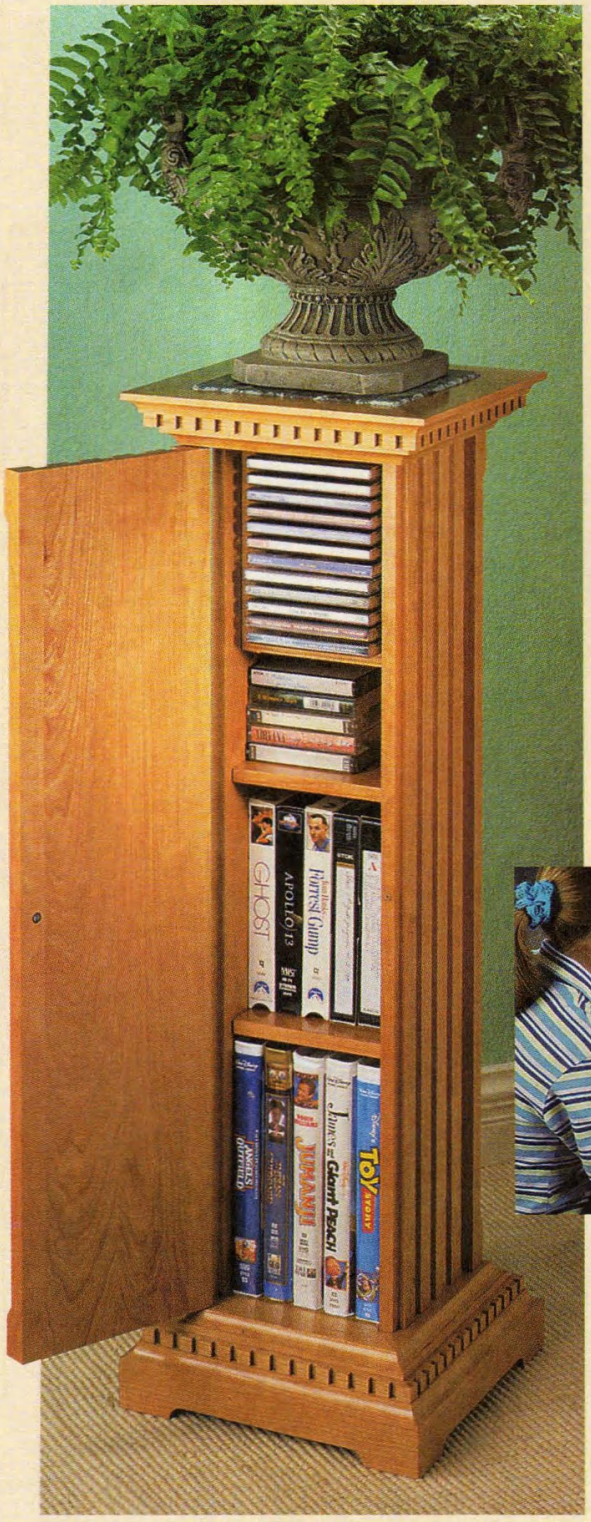

▲ ***Storage Pedestal.*** *Open the hidden door on this cherry pedestal, and you'll find plenty of space for CD's or video tapes. For detailed plans, see page 16.*

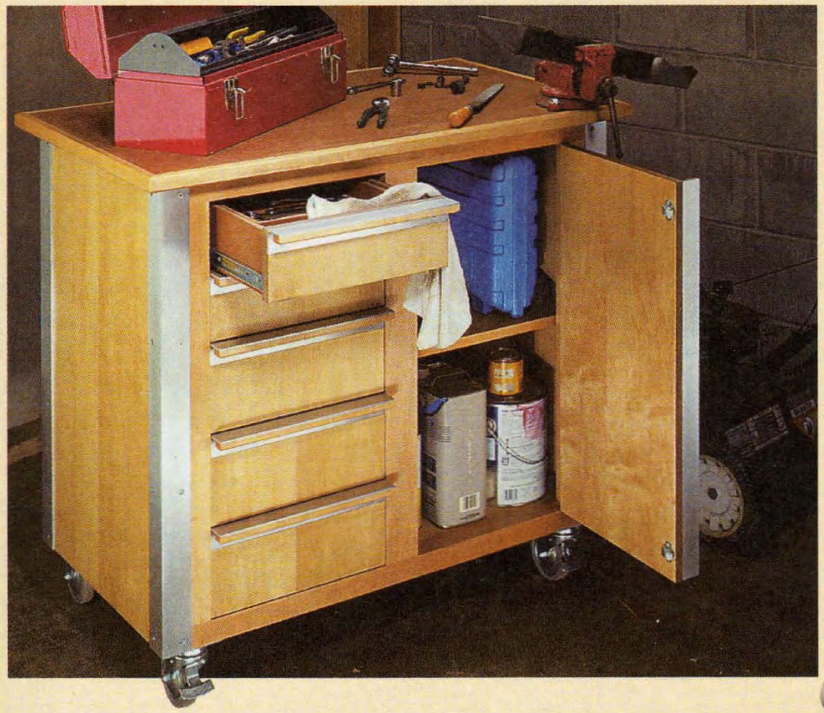

▲ ***Roll-Around Tool Cart.*** *Heavy-duty casters, full-extension drawer slides, and aluminum corners and pulls make this roll-around tool cart suitable for the garage or the shop. Detailed instructions start on page 6.*

▲ ***Lap Desk.*** *The lid of this lap desk lifts up to reveal storage space for a roll of paper, pencils, and crayons. Plans begin on page 24.*